DRAFT

Environmental Assessment

for

PLIR 35(1)
Wadsworth Bypass Road Project
Project No. H6169400
Pyramid Lake Indian Reservation
Washoe County, Nevada

January 2017

Prepared for:

Bureau of Indian Affairs
Western Regional Office – Division of Transportation
Phoenix, Arizona

In cooperation with:

Federal Highway Administration

and

Nevada Department of Transportation

On behalf of:

Pyramid Lake Paiute Tribe
Nixon, Nevada

Draft
Environmental Assessment

for

PLIR 35(1)
Wadsworth Bypass Road Project
Project No. H6169400

Pyramid Lake Indian Reservation
Washoe County, Nevada

January 2017

Prepared for:

Bureau of Indian Affairs
Western Regional Office – Division of Transportation
2600 N. Central Avenue, Suite 150 – 13th Floor
Phoenix, Arizona 85004
[602]-379-6782

In cooperation with:

Federal Highway Administration
and
Nevada Department of Transportation

On behalf of:

Pyramid Lake Paiute Tribe
Nixon, Nevada

This page has been intentionally left blank.

TABLE OF CONTENTS

page

1.0 PURPOSE AND NEED 1
- 1.1 PROJECT BACKGROUND AND LOCATION 1
- 1.2 PURPOSE AND NEED 3
- 1.3 STATUTORY AND REGULATORY AUTHORITY 5
- 1.4 AGENCY SCOPING AND ISSUE DEVELOPMENT 5
- 1.5 PUBLIC INVOLVEMENT 6

2.0 ALTERNATIVES 8
- 2.1 INTRODUCTION 8
- 2.2 ALTERNATIVES 8
  - 2.2.1 No Action Alternative 8
  - 2.2.2 Proposed Action Alternative 8

3.0 AFFECTED ENVIRONMENT 20
- 3.1 LAND RESOURCES 20
- 3.2 WATER RESOURCES 24
- 3.3 AIR QUALITY 27
- 3.4 LIVING RESOURCES 30
- 3.5 CULTURAL RESOURCES 35
- 3.6 SOCIO-ECONOMIC RESOURCES 36
- 3.7 RESOURCE USE PATTERNS 39
- 3.8 OTHER VALUES 43

4.0 ENVIRONMENTAL CONSEQUENCES 48
- 4.1 LAND RESOURCES 50
- 4.2 WATER RESOURCES 53
- 4.3 AIR QUALITY 54
- 4.4 LIVING RESOURCES 57
- 4.5 CULTURAL RESOURCES 63
- 4.6 SOCIO-ECONOMIC RESOURCES 64
- 4.7 RESOURCE USE PATTERNS 68
- 4.8 OTHER VALUES 73

5.0 SECTION 4(F) EVALUATION 79
- 5.1 PROPOSED ACTION 79
- 5.2 SECTION 4(F) RESOURCES 80
- 5.3 IMPACTS TO SECTION 4(F) RESOURCES 80
- 5.4 MEASURES TO MINIMIZE IMPACTS 81
- 5.5 FINDING OF DE MINIMIS IMPACTS 82
- 5.6 SECTION 4(F) COORDINATION/CONSULTATION 82

6.0 MITIGATION MEASURES 83
- 6.1 PROJECT MITIGATION 83
- 6.2 ADAPTIVE MANAGEMENT 86

7.0 CONSULTATION AND COORDINATION 87
- 7.1 CONSULTATION 87
- 7.2 APPLICABLE REGULATORY REQUIREMENTS 88

8.0 LIST OF PREPARERS 90

9.0 REFERENCES 91

LIST OF TABLES

Table 1 Average Traffic Volume: State Route 447 in Wadsworth 3
Table 2 Summary of Agency Requirements 5
Table 3 Resources and Issues 6
Table 4 Public Scoping Meeting Attendance List 6
Table 5 Proposed Right-of-Way Parameters 10
Table 6 Typical Equipment and Ancillary Facilities for Road Construction 17
Table 7 NAAQS for Criteria Pollutants 28
Table 8 Prevention of Significant Deterioration Increments 29
Table 9 USFWS Listed, Proposed, and Candidate Species for the Project Area and Vicinity 34
Table 10 Existing and Projected Traffic Volume 42
Table 11 Existing Ambient Day-Night Average Sound Level (Ldn) 44
Table 12 Estimated Construction Emissions of Criteria Pollutants 55
Table 13 Construction Sound Levels 74
Table 14 Post-Construction Traffic Sound Levels 74
Table 15 List of Preparers 90
Table 16 List of Contributors 90

LIST OF FIGURES

Figure 1 Project Location Map 2
Figure 2 Proposed Project Area 9
Figure 3 Proposed Action 11
Figure 4 Topographic Map 21
Figure 5 Soils Map 22
Figure 6 Vegetation Communities Map 32
Figure 7 Cumulative Effects Assessment Area 49

LIST OF APPENDICES

Appendix A	Typical Roadway Cross Sections
Appendix B	U.S. Fish and Wildlife Service Correspondence
Appendix C	Tribal Historic Preservation Officer Concurrence Documentation
Appendix D	Natural Resources Conservation Service Correspondence
Appendix E	Biological Review

LIST OF ACRONYMS & ABBREVIATIONS

BIA	Bureau of Indian Affairs
CFR	Code of Federal Regulations
dB	Decibels
EA	Environmental Assessment
FHWA	Federal Highway Administration
FPPA	Farmland Protection Policy Act
IRR	Indian Reservation Road
NAAQS	National Ambient Air Quality Standards
NAC	Nevada Administrative Code
NDEP	Nevada Division of Environmental Protection
NDOT	Nevada Department of Transportation
NEPA	National Environmental Policy Act of 1969
NHPA	National Historic Preservation Act
NRCS	Natural Resources Conservation Service
PLIR	Pyramid Lake Indian Route
SAFETEA-LU	Safe, Accountable, Flexible, Efficient Transportation Equity Act: A Legacy for Users
SWPPP	Storm Water Pollution Prevention Plan
TERO	Tribal Employment Rights Office
THPO	Tribal Historic Preservation Officer
TNM	Traffic Noise Model
U.S.	United States
USACE	U.S. Army Corps of Engineers
USC	U.S. Code
USFWS	U.S. Fish and Wildlife Service
WOUS	Waters of the U.S.

1.0 PURPOSE AND NEED

1.1 PROJECT BACKGROUND AND LOCATION

The Bureau of Indian Affairs (BIA) Division of Transportation and the Pyramid Lake Paiute Tribe, in cooperation with the United States (U.S.) Department of Transportation, Federal Highway Administration (FHWA) and the Nevada Department of Transportation (NDOT) propose the construction of Pyramid Lake Indian Route (PLIR) 35(1) (PLIR 35(1)), also known as the Wadsworth Bypass Road Project (proposed project). The proposed bypass road would be approximately 2.7 miles long, and include a two-lane asphalt travel surface and associated shoulders and embankments. The proposed project would occur entirely on the Pyramid Lake Indian Reservation (Reservation), west of the community of Wadsworth, Nevada (Figure 1). Specifically, the proposed bypass road would begin approximately one mile southwest of Wadsworth, at NDOT Station Line "W" 57+78± on State Route 427 and terminate approximately 2.5 miles northwest of Wadsworth on State Route 447 at NDOT Station Line "IS" 143+75±. Situated west of Wadsworth, the proposed bypass road would provide a means for through-traffic to bypass Wadsworth's residential and school-zoned areas. The proposed project would require new intersection designs, including realignment and reconstruction of approximately 0.2 mile of Olinghouse Road where it would be intersected by the proposed bypass road.

The superintendent, BIA Western Nevada Agency, must grant a right-of-way in order for the proposed bypass road to be constructed because it would be located on the Reservation. The right-of-way for the bypass road would be granted to NDOT, who currently holds rights-of-way for State Routes 427 and 447. The existing NDOT right-of-way for State Route 447 between the proposed bypass road and Wadsworth would be abandoned by NDOT once construction of the proposed project is completed. The abandoned segment of State Route 447 would become the property and responsibility of the Pyramid Lake Paiute Tribe. The design and construction of the proposed project would be subject to NDOT approval since the bypass road and associated right-of-way would be maintained and operated by NDOT. Construction within existing easements or agreements would be required where the proposed road would cross existing rights-of-way and easements held by other parties.

BASE MAP: COMPOSITE USGS 7.5 MINUTE QUADRANGLE

PROJECT AREA

COUNTY LINE

PYRAMID LAKE INDIAN RESERVATION

0 2 4 8 MILES

N

ENVIRONMENTAL ASSESSMENT
PLIR 35 (1)
WADSWORTH BYPASS ROAD PROJECT

FIGURE 1
PROJECT LOCATION MAP

BUREAU OF INDIAN AFFAIRS
WESTERN REGIONAL OFFICE
DIVISION OF TRANSPORTATION
2600 N. CENTRAL AVE., STE 150, FLOOR 13
PHOENIX, AZ 85004

DATE DRAWN: APRIL 22, 2016

SCALE: 1" = 4 MILES

1.2 PURPOSE AND NEED

The proposed federal action is granting of right-of-way by the BIA, and new road construction using either Tribal Transportation Program funds and/or federal-aid highway funds that have been allocated to NDOT by the FHWA. The granting of right-of-way and expenditure of federal funds constitute federal actions under implementing regulations for compliance with Section 102(2) of the National Environmental Policy Act of 1969, as amended (NEPA).

The purpose of the Proposed Action is to provide an alternative means of conveying highway traffic around the community of Wadsworth. The Proposed Action is needed because currently, State Route 447 traffic on its way to Pyramid Lake and destinations north of Wadsworth pass through the residential areas of Wadsworth and immediately in front of Natchez Elementary School (Photographs 1 and 2). Pyramid Lake can draw substantial numbers of visitors on holidays and during prime fishing seasons, and special events in the Black Rock Desert such as the annual Burning Man event, draw large numbers of participants. Traffic volume in Wadsworth can become concentrated and intense during these periods. Existing average daily traffic volumes on State Route 447 are presented in Table 1. The table also presents the average traffic volume during the Burning Man event.

Table 1 Average Traffic Volume: State Route 447 in Wadsworth

Average Volume: Typical Day (Daily Vehicle Trips)	Average Volume: Burning Man (Total Vehicle Trips)
2,287	89,600

Source: (Fehr & Peers 2011; Bureau of Land Management 2012)

In addition, the relocated facility would serve the land immediately north and northwest of the residential-core of Wadsworth that is already planned for development and direct traffic generated from that development away from Wadsworth's residential core.

The section of State Route 447 through Wadsworth is not identified as a high-crash location. However, there were 33 vehicle accidents reported between 2006 and 2010 on the 12-mile section of State Route 447, beginning at its intersection with State Route 427 in Wadsworth. The majority of the accidents involved vehicles running off the road; however, none were fatal. The Proposed Action would reduce the potential for accidents through Wadsworth's residential core.

Photo 1: State Route 447 through residential areas in Wadsworth

Photo 2: State Route 447 at Natchez Elementary School

1.3 STATUTORY AND REGULATORY AUTHORITY

This document is the Environmental Assessment (EA) generated under regulations of the Council on Environmental Quality at 40 Code of Federal Regulations (CFR) 1500.3, and the implementing regulations codified by the Department of the Interior at 43 CFR 46 and procedures adopted by the BIA (BIA 2012). This EA has been prepared in accordance with the guidelines contained in the U.S. Department of the Interior, BIA NEPA Handbook (59 IAM 3-H). This handbook established a uniform process of complying with NEPA and its implementing regulations (40 CFR, Parts 1500-1508). The purpose of this EA is to evaluate the likely environmental consequences resulting from the granting of right-of-way and resulting construction of the proposed project. Table 2 provides a summary of the agencies and organizations involved in the compliance process and the primary applicable authorities related to their actions.

Table 2 Summary of Agency Requirements

Agency/Organization	Permit/Authorization
BIA, Western Regional Office	NEPA lead – preparation: review, approval, and compliance activities. Endangered Species Act and National Historic Preservation Act of 1966 (NHPA) lead
BIA, Western Nevada Agency	NEPA review and compliance activities; Issuance of right-of-way grant; NEPA signatory official
Pyramid Lake Indian Reservation	NEPA participating entity: coordination, consultation, and concurrence; responsible for obtaining Clean Water Act: Section 404 permit for fill of Waters of the U.S. (WOUS) at an irrigation ditch crossing
FHWA	NEPA participating entity: coordination, consultation, and concurrence; design review, Section 4(f)
NDOT	Approval of road design and construction specifications, authorization for activities encroaching existing NDOT right-of-way

1.4 AGENCY SCOPING AND ISSUE DEVELOPMENT

Issues were developed through an agency scoping process involving internal meetings and discussions among staff from the BIA Western Regional Office, BIA Division of Transportation, the Pyramid Lake Paiute Tribe Transportation Department, and NDOT. The FHWA was sent a written invitation to become a cooperating agency, and provided further issue development in their response of acceptance. Written consultation with the U.S. Fish and Wildlife Service (USFWS) was performed. Written consultation with the Pyramid Lake Paiute Tribe Tribal Historic Preservation Officer (THPO), pursuant to the NHPA, as amended, was also performed. Agency scoping documentation is on record in the Environmental Analysis File at the Western Regional Office, Division of Transportation.

Environmental issues identified as particularly relevant to the construction of the proposed project and that have been carried forward for analysis in this EA are listed in Table 3.

Table 3 Resources and Issues

Resource/Value	Issue/Concern
Land resources	• Potential impacts on topography, soils, geology and minerals, and paleontological resources
Water resources	• Potential effects on groundwater resources and surface waters • Potential effects on floodplains and drainage patterns
Air quality resources	• Potential short- and long-term impacts on air quality
Living resources	• Potential effects on biological communities • Potential impacts on vegetation, wildlife, threatened and endangered species, tribally sensitive species, and migratory birds
Cultural resources	• Potential impacts on pre-historic, historic, cultural, or religious sites, if present • Section 4(f) • Potential effects on paleontological resources
Socio-Economic resources	• Potential effects on tribal employment and income • Potential impacts on demographic trends and environmental justice • Potential effects on community infrastructure
Resource use values	• Potential effects on hunting, agriculture, mining, and recreation use values • Potential effects on transportation networks
Other values	• Potential noise and visual effects

1.5 PUBLIC INVOLVEMENT

A public meeting was held on July 26, 2011, at the Pyramid Lake Indian Reservation Community Building in Wadsworth, Nevada. As shown in Table 4, a total of five people attended the public scoping meeting. Those in attendance represented members of the Pyramid Lake Paiute Tribe Transportation Department, NDOT, Summit Engineering, and Stantec Consulting Services Inc. (Stantec) (formerly JBR Environmental Consultants, Inc.). A packet of information containing a meeting agenda, project maps, a flowchart of the general NEPA process, and project comment sheets were available to those in attendance. No comments were generated during the meeting.

Table 4 Public Scoping Meeting Attendance List

Attendee Name	Agency/Group Affiliation
Johnnie Garcia	Transportation Department, Pyramid Lake Paiute Tribe
Scott Carey	Environmental Department, Pyramid Lake Paiute Tribe
Bill Glaser	NDOT
James Darrough, P.L.S.	Summit Engineering Corporation
Nancy Kang	Stantec Consulting Services Inc.

Prior to the meeting, a public notice describing the meeting time, location, and purpose was published in the Fernley Leader newspaper. Several fliers describing the meeting specifications were also displayed at locations on the Reservation that are frequented by many tribal members, such as the Wadsworth Post Office, Nixon Post Office, Nixon Tribal Clinic, and the I-80 Smokeshop in Wadsworth. The Pyramid Lake Paiute Tribe Transportation Department also sent an email to tribal members to notify them of the public meeting. The public notice, fliers, and

email contained instructions on providing comments or questions in the event that attending the meeting was not possible. No comments have been received.

2.0 ALTERNATIVES

2.1 INTRODUCTION

The Proposed Action Alternative and No Action Alternative are described in this chapter. Negligible to moderate adverse impacts associated with the Proposed Action Alternative were identified. However, no significant impacts associated with the Proposed Action Alternative were identified, and no alternate alignments or alternatives were identified during scoping. No alternatives are necessary to respond to unresolved conflicts concerning alternate uses of available resources (40 CFR 1507.2(d); 43 CFR 46.310).

2.2 ALTERNATIVES

2.2.1 No Action Alternative

Under this alternative, the BIA Western Nevada Agency Superintendent would not grant the necessary right-of-way to NDOT to facilitate construction of the proposed Wadsworth Bypass Road. Without construction of a bypass road, through-traffic would continue to travel through the center of Wadsworth on State Route 447, directly past an elementary school and areas where residences are most concentrated. Delays from reduced speed limits and safety hazards resulting from increased traffic volumes on State Route 447 through Wadsworth would continue, particularly during holidays, the fishing season, and the annual Burning Man event.

Commercial and industrial development is planned on Reservation lands immediately north and northwest of the residential area in Wadsworth. Without a bypass road existing State Route 447 would continue to be the primary road providing access to this general area. Under the No Action Alternative, a secondary, alternate route to the planned development would not be created.

The No Action Alternative would not fulfill the purpose or need of the project.

2.2.2 Proposed Action Alternative

The proposed federal action consists of granting the right-of-way to NDOT necessary to facilitate the construction of the proposed project on the Reservation in Washoe County, Nevada. The right-of-way would vary in width, and would include the entire length of the proposed Wadsworth Bypass Road and a short segment of Olinghouse Road that would be intersected and realigned (Figure 2). The right-of-way would generally be centered on the proposed road and segment of Olinghouse Road that would be realigned. However, northeast of the intersection of the proposed road and Olinghouse Road, the right-of-way would be irregularly shaped (Figure 2). The right-of-way would consist of a total of approximately 85.3 acres, all of which would occur on Reservation lands. The various right-of-way widths and the length that would correspond to each width are provided in Table 5.

BASE MAP: 2015 NAIP IMAGERY

PROJECT AREA

PYRAMID LAKE INDIAN RESERVATION BOUNDARY

N

0 1,000 2,000 4,000 FEET

ENVIRONMENTAL ASSESSMENT PLIR 35 (1) WADSWORTH BYPASS ROAD PROJECT

FIGURE 2 PROPOSED PROJECT AREA

BUREAU OF INDIAN AFFAIRS
WESTERN REGIONAL OFFICE
DIVISION OF TRANSPORTATION
2600 N. CENTRAL AVE., STE 150, FLOOR 13
PHOENIX, AZ 85004

DATE DRAWN: APRIL 22, 2016

SCALE: 1" = 2,000 FEET

Table 5 Proposed Right-of-Way Parameters

Right-of-Way Width (feet)	Right-of-Way Length (feet)	Right-of-Way Area (square feet)	Right-of-Way Area (acres)	Mile(s) of Corresponding Road
190	1,800	342,000	7.8	0.3 mile
200	8,500	1,700,000	39.0	1.6 miles
255	100	25,500	0.6	0.02 mile
335	505	169,175	3.9	0.1 mile
350	390	136,500	3.1	0.07 mile
400	1,360	544,000	12.5	0.3 mile
460	405	186,300	4.3	0.08 mile
Irregular	2,375	613,270	14.1	0.2 mile of proposed bypass road and 0.2 mile of realigned Olinghouse Road
TOTAL:	**15,435**	**3,716,745**	**85.3**	**2.9 miles of road**

Note: Values listed in Table 5 are approximate.

Wadsworth Bypass Road Project

The proposed project consists of constructing the approximately 2.7-mile proposed Wadsworth Bypass Road and realigning and reconstructing approximately 0.2 mile of existing Olinghouse Road that would be intersected by the proposed bypass road. The proposed project would occur entirely on the Reservation. The southern end of the proposed bypass road would begin at an intersection with existing State Route 427 at NDOT Station Line "W" 57+78±, approximately 1 mile southwest of Wadsworth. The northern end of the proposed bypass road would occur north of Wadsworth, at an intersection with existing State Route 447 at NDOT Station Line “IS” 143+75± (Figure 3). Aligned between intersections with these two roads, through-traffic traveling on the proposed bypass road would be able to bypass the Wadsworth community, including school zones. Minor repaving and construction of State Routes 427 and 447 would likely occur where the proposed bypass road would intersect them. The existing NDOT right-of-way for State Route 447 between the proposed bypass road and Wadsworth would be abandoned once construction of the proposed project is completed. The Pyramid Lake Paiute Tribe would become the owner of the abandoned segment of State Route 447. Construction within existing easements or rights-of-way held by other parties would be required in addition to the proposed right-of-way.

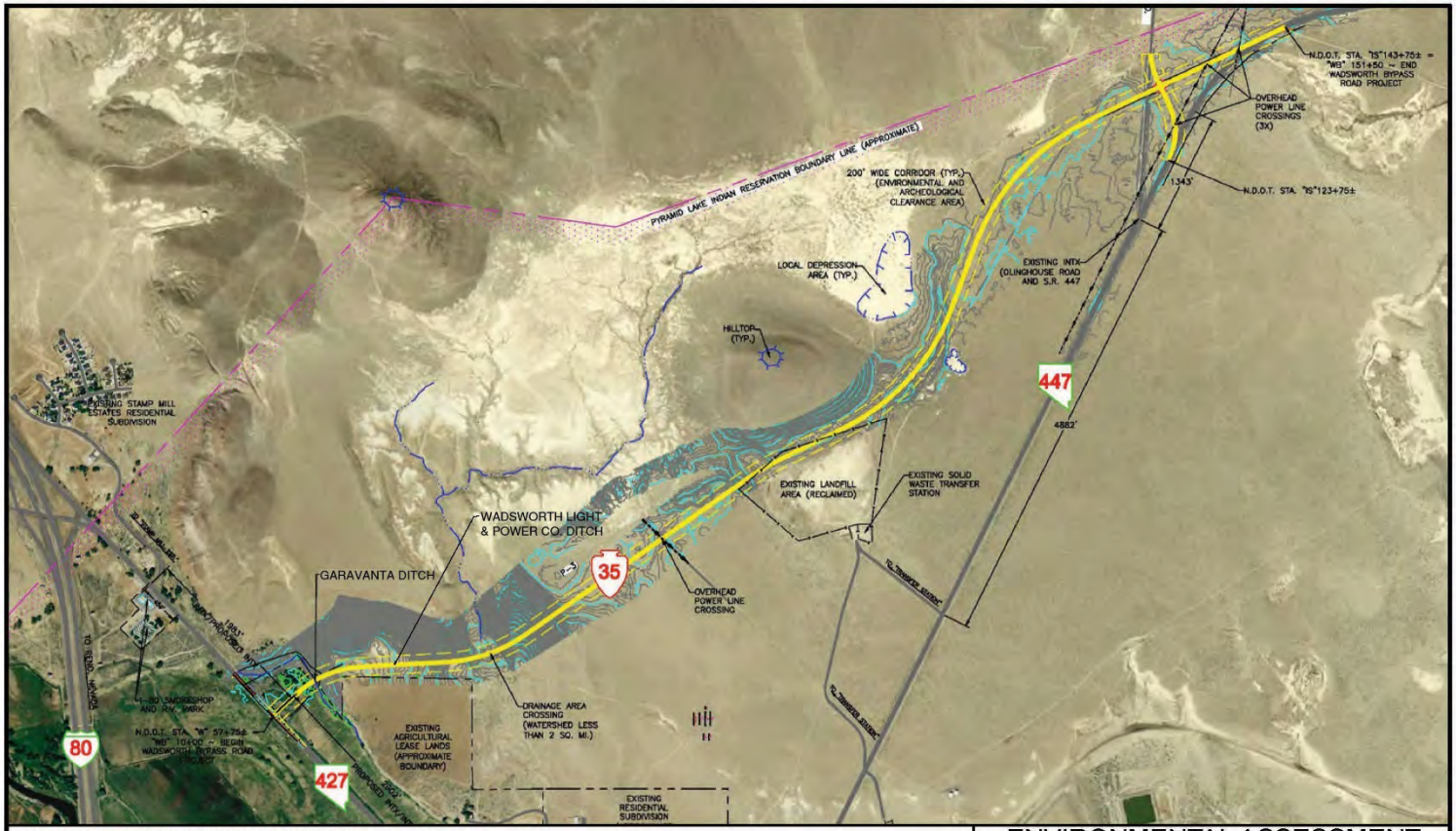

BASE MAP: COURTESY OF SUMMIT ENGINEERING

ENVIRONMENTAL ASSESSMENT
PLIR 35 (1)
WADSWORTH BYPASS ROAD PROJECT

FIGURE 3
PROPOSED ACTION

BUREAU OF INDIAN AFFAIRS
WESTERN REGIONAL OFFICE
DIVISION OF TRANSPORTATION
2600 N. CENTRAL AVE., STE 150, FLOOR 13
PHOENIX, AZ 85004

DATE DRAWN: APRIL 22, 2016

SCALE: NOT TO SCALE

The proposed bypass road and the affected segment of Olinghouse Road would be located entirely within the proposed right-of-way. All construction disturbance and equipment staging areas needed to construct the proposed bypass road and realign Olinghouse Road would also occur within the proposed right-of-way. For the remainder of this document, the term "project area" is used interchangeably to refer to the proposed right-of-way area. The limits of the proposed project area are shown on Figure 2.

The project area is 85.3 acres. Although disturbance could occur anywhere within the project area during construction, it is anticipated that actual disturbance would be less and would be kept as near to the proposed road and associated embankments as feasible. The construction of the road and embankments is anticipated to disturb approximately 43.6 acres. Most areas where surface disturbance would occur would be reclaimed once construction is completed, making the disturbance temporary and short-term. Temporary surface disturbance would include embankments, construction staging areas, and other areas where construction activities and related disturbances occur. Permanent surface disturbance would occur where the road surface, shoulder areas, and culvert crossings are constructed. Approximately 10.6 acres of permanent disturbance would occur; any other disturbances would be temporary.

Wadsworth Bypass Road would include a 28-foot wide travel surface that consists of two, 12-foot wide asphalt travel lanes and a 2-foot wide asphalt shoulder adjacent to the outer edge of each lane. The 28-foot wide travel surface would slope downward at approximately 2 percent from the road centerline on both sides of the road to allow for proper drainage and storm water removal. An unpaved shoulder would be located adjacent to the paved shoulders on both sides of the road. The unpaved shoulders would be three feet wide and slope at approximately 4 percent, downward and away from the road surface. See Appendix A for typical cross sections. Road embankments would slope no steeper than a 6:1 ratio for at least 27 feet beyond both unpaved shoulders. Cut and fill slopes beyond this would slope at a 3:1 ratio or less. The maximum grade of the proposed road would not exceed 5 percent. The proposed bypass road, including all culvert crossings, embankments, driving surface, and other associated components would be designed, constructed, tested, operated, and maintained in accordance with state and federal regulations, including the NDOT Construction Manual (NDOT 2009). The NDOT Construction Site Best Management Practices Manual (2006) would be adhered to, and best management practices would be implemented throughout the entire construction phase.

Detailed construction, operation, and reclamation procedures for the proposed project are provided in the following sections. The detailed construction procedures below would be expected to vary slightly depending on the methods used by specific contractors selected to construct the road. The final design plan(s) for the proposed project would be approved by NDOT prior to construction. The term "contractor", as used hereafter in this EA, refers to any

person, group, or company contracted to construct or perform maintenance of the proposed project.

Construction Procedures

Vegetation Clearing and Removal

Initially, construction of the proposed project would begin by clearing and removing vegetation from within the project area. There are approximately 82.1 acres of existing vegetation cover within the project area. While the entire project area may be disturbed, construction disturbance and clearing would be kept as minimal as feasible. At a minimum, all vegetation within the 43.6-acre area associated with the proposed road embankments would be cleared and removed. Most of the surface disturbance resulting from the proposed project would be temporary for the duration of construction and establishment of successful reclamation. The only area where permanent removal of vegetation would be anticipated is the portion of the road embankment area that the proposed bypass road and realigned segment of Olinghouse Road would occupy. All other vegetation within the project area that is removed during construction would be seeded immediately following completion of construction. The removal of trees would be avoided to the extent feasible during construction. The trunk sections of any trees that are removed during construction would be cut into 2-foot sections and left in the right-of-way for Tribal members to collect for firewood. The remaining vegetation that has been cleared and removed would be mulched and stockpiled within the project area for use during reclamation and/or disposed of at an authorized facility.

Grading and Earthwork Activities

Grading and earthwork activities would begin after vegetation and organic material has been removed. Grading and earthwork activities would be performed with the purpose of constructing the road grade upon which the travel surface will rest, and all of the associated embankments, drains, and culvert crossings. Initially, topsoil within areas where earthwork and grading activities would be performed would be removed and stockpiled within the project area for use during reclamation. After topsoil has been removed, the road embankments would be constructed using typical cut and fill techniques. Areas of native soils and material that occur at elevations above the proposed road grade elevations would be excavated, or cut, to lower the elevation to the desired road grade. The cut material would then be used as fill in areas where the elevations of native soils and material are below the proposed road grade elevations. If large rocks or other unsuitable material are discovered in the cut, the material would be removed before the cut is used as fill, and disposed of in accordance with all laws and regulations. Fill material would be added directly on top of native soils in layers until the approximate elevation of the road grade is reached. Each layer of fill would be compacted prior to the addition of the next layer, and the native soils would be compacted prior to the addition of any fill. The amount of material from cuts would be balanced to the amount material needed as fill to the extent feasible. If material

from cuts is inadequate for the amount of fill needed, fill material would be imported from outside of the project area. Fill material, whether imported or native to the project area, would be free of organic material, have a low plasticity index, and would conform to NDOT standards.

After initial grading and earthwork activities have been performed and the road grade resembles a close approximation of the designed road grade, fine grading would be performed. Survey crews would place stakes on the road grade with markers that designate the desired elevations of the road grade fill. Fill would be added, leveled, and compacted until the road grade surface is flush with the markers on the stakes. The width of the road grade that would accommodate the travel surface would be fine graded with a 2 percent slope between the centerline and outer edges. The width of road grade adjacent to this area would accommodate the road shoulders. During fine grading, a 4 percent slope would be maintained in these areas. The remaining width of road grade on either side of the centerline outside of where shoulders would be constructed would be graded with a slope ratio of 6:1. Earthwork would be completed when the desired elevations and slopes are reached and the road grade is compacted to NDOT standards. The proposed grades are provided on the typical roadway cross section (Appendix A). The final grading, including slope ratios, elevations, and related details would be provided on the final design plans, and approved by NDOT prior to construction.

Existing Structures and Infrastructure

The proposed bypass road would intersect State Routes 427 and 447, Olinghouse Road, several minor unpaved roads, existing fences, two irrigation ditches, overhead power lines, and an existing solid waste transfer station. The intersection with Olinghouse Road would include realigning and reconstructing the eastern most 0.2 mile segment of the road to provide a safe intersection with the proposed bypass road and State Route 447 (Figure 2). The affected length of the road would occur within the project area. The intersection of the proposed bypass road and State Routes 427 and 447 would require disturbance to the existing asphalt pavement on the roads. The proposed intersections with Olinghouse Road, State Route 427, and State Route 447 would be included on the final design plans for the proposed project, and detail the exact specifications and parameters associated with each. The final design plans would be subject to NDOT approval prior to commencement of construction of the proposed project.

Existing fences within the project area consist of strand barbed-wire fences. Most fences are distressed and serve no purpose, but a reclaimed portion of the solid waste transfer station located east of the project area is fenced. The portion of this fence occurring within the right-of-way would be relocated just outside of the right-of-way. All other fences would be permanently removed during construction of the proposed project. Many of the minor unpaved roads also no longer serve any purpose, evident by the mature-aged vegetation established within the road surface. No formal intersection with these unpaved roads and the proposed bypass road would be

provided. There are two unpaved roads that would be intersected that appear to be travelled sparingly. One of these occurs underneath and next to an overheard transmission line, and another occurs north of an irrigation ditch. A cattle guard and gate would be installed on these roads where they would intersect the proposed bypass road.

The proposed bypass road would cross beneath overhead power lines in four locations. Depending on the final grade of the proposed road, the vertical distance between the surface of the road and the transmission lines may not be adequate to ensure the safe clearance of large trucks. If necessary, the transmission lines would be raised to an adequate elevation above the road surface at the crossing. Existing power poles associated with the transmission lines would be relocated where they occur within the proposed roadway and embankments. Consultation with owners of the various utility lines would occur during the final design and construction phases of the proposed road to ensure uninterrupted services.

A culvert crossing would be constructed to allow the road to pass over natural drainages and roadside ditches at eight locations. Culvert crossings would also be constructed at each of the irrigation ditches (Figure 3). The culverts would be constructed to maintain functionality of the ditches and preserve the integrity and character of the irrigation system. Culvert crossings are discussed in more detail below.

The portion of the existing solid waste transfer station that would be crossed has been reclaimed. The reclaimed transfer station is essentially an area where solid waste has been covered or buried with a layer of soil that was subsequently vegetated. As described above, the existing fence around the reclaimed landfill would be relocated outside of the proposed right-of-way.

Culvert Crossings

The proposed bypass road would include construction of culvert crossings to allow the road to pass over natural drainages, irrigation ditches, and roadside cross ditches at eight locations. The diameter of culvert pipe at each crossing would be approved by NDOT prior to construction, and would at a minimum, accommodate the maximum flow possible at the each respective crossing. The type of pipe used as each crossing would be subject to NDOT approval. Typical pipe types used by NDOT include reinforced concrete pipe, concrete pipe without reinforcement, corrugated metal pipe, plastic pipe, or metal arch pipe. Culvert crossings would be constructed concurrent with grading and earthwork activities. Final design plans for the project would detail the proposed culvert crossing. The proposed bypass road would cross two existing irrigation ditches (Garavanta Ditch and Wadsworth Light and Power Ditch) (Figure 3). A culvert crossing would also be required at each irrigation ditch. The first crossing is located approximately 550 feet northwest of State Route 427. Approximately 100 feet of culvert pipe would be installed at the proposed crossing of the irrigation ditch at this location. The other irrigation ditch is located

approximately 1,150 feet north of the first irrigation ditch, as shown on Figure 3. Approximately 100 feet of culvert pipe would be installed at this location. The length of pipe, diameter of pipe, type of pipe, and similar specifications would be provided in the final design plans.

Culvert construction would include excavation and trenching, placement of bedding material, installation of culvert pipe(s), and backfilling. Excavation and trenching would include removing fill material from the road embankments in order to properly align the culvert pipe with the flow line of the existing drainage. Trenches excavated in the road embankments would be sloped back or shored as a preventative measure to prevent collapse during construction if needed. Material removed during excavation and trenching would be temporarily stockpiled next to the crossing. If the native material on the trench floor is determined to be adequately stable for the culvert crossing, the culvert pipe would be placed directly on it. If the native material does not provide sufficient stability for support of the culvert crossing, bedding material would be added to the trench floor to provide a stable foundation. Bedding material would consist of mineral aggregate or similar material approved for such use by NDOT. Once the trench foundation is prepared, the culvert would be positioned on it. Culvert pipes would be placed on the trench floor with the flow line grade and alignment as close to that as the segment of the irrigation ditch and topographic swale pipes would replace. Backfilling would include placing and compacting material in excavations for culverts. Backfill material would consist of material removed during excavated, granular backfill, slurry cement backfill, or a combination of these or other materials approved by NDOT. Backfilling would be performed in conformance with NDOT standards. Small, shallow rip-rap depressions or similar treatments approved by NDOT would be placed around the pipe inlet and outlet after the construction of the crossing is completed.

Base Courses, Shouldering, Pavement, and Surface Treatments

The proposed bypass road and realigned segment of Olinghouse Road would be constructed on the finished road embankments. Several layers of aggregate and/or aggregate blends, asphalt, and other materials approved by NDOT would comprise the proposed roadways. The roadway would be approximately 28 feet wide, including two, 12-foot-wide travel lanes and a 2-foot wide shoulder on the other edge of both travel lanes. The final, top layer would likely consist of a typical open-graded, plantmix bituminous surface (i.e. asphalt driving surface) and may be treated with one or more protective seals or coatings. The final design plans for the proposed project would detail the various layers and any coatings that would be constructed and applied to form the proposed bypass road and realigned segment of Olinghouse Road. The final design plans would be reviewed and approved by NDOT prior to construction of the project. Road striping, signage, reflectors, and similar traffic control and management treatments would be subject to NDOT approval on the final design plans.

Aggregate and other shouldering material would be added adjacent to road surface and compacted. Each shoulder would be constructed to an approximate width of 3 feet. The surface of the shouldering material would be graded at a 4 percent slope or similar, as approved by NDOT, draining away from the road surface. The type of aggregate and shouldering material that would be used, and detailed specifications regarding shoulder construction would be approved by NDOT prior to construction.

Aggregate and materials used to form the roadway and shoulders would be trucked to the project site from existing borrow pits or sources. If suitable aggregate are encountered in native material during construction, the aggregate may be used in combination with imported material. Asphalt would be mixed at an offsite existing facility and trucked to the site as well. Dump trucks, graders, dozers, paver machines, and various other pieces of equipment and tools would be used to place the base courses and the driving surface layers. Please see Table 6 for a detailed list of the equipment that would be anticipated to be used for construction of the project.

Watering

Water would be used to compact soils and fill material, process material, and to control fugitive dust emissions. There are no existing water wells within the project area. Water for the project would be purchased from a nearby landowner and/or obtained from an existing source on the Reservation and brought to the project area by a water truck. If purchased from a landowner, the construction contractor would file for a temporary permit from the Nevada Division of Water Resources. The temporary permit would allow some portion of the existing water rights at the existing source to be temporarily allocated for construction at the project area. The permit would be obtained prior to acquisition of the water.

Construction Equipment, Workforce, and Schedule

During construction of the proposed project equipment would be stored at a temporary staging area that would be located within the proposed project area. An equipment refueling area would also be located within the staging area and would include secondary containment as necessary. The type and number of equipment, ancillary facilities, and other tools that would be used for construction would vary depending on the contractor(s) selected for construction. The list of equipment and ancillary facilities provided in Table 6 is typical of most road construction projects and would be anticipated to resemble the equipment required for the proposed project.

Table 6 Typical Equipment and Ancillary Facilities for Road Construction

Mobile Equipment		Other Equipment and Ancillary Facilities	
Equipment Type	**Approximate Quantity**	**Equipment Type**	**Approximate Quantity**
Construction Grader	2	Construction Trailer	1
Dozer	2	Portable Toilet (i.e. Port-a-John)	1

Mobile Equipment		Other Equipment and Ancillary Facilities	
Equipment Type	**Approximate Quantity**	**Equipment Type**	**Approximate Quantity**
Backhoe	2	Garbage Bins	2
Wheel Loader	2	Chainsaw	5
Steel-Wheel Roller	2	Water Storage Tank	5
Paver Machine	2	Fuel Storage Tank	3
Water Truck	2	Jackhammer	5
Dump Truck	5	Auger/Drill	5
Full-Sized 4X4 Vehicle	3	Hand Tools (e.g., shovels, rakes, pry bars, sledge-hammers, etc.)	Many
Trenching Machine (e.g. Ditch Witch)	2	55-Gallon Drum or Similar Container	10 or More

Note: Equipment and quantities listed are representative of typical road construction projects. Actual equipment and the quantity of that equipment used to construct the proposed project may vary from that listed in Table 6.

Construction crews would range in size depending on specific construction activities being performed at any given time and the contractor selected to perform those activities. Most of the construction activities would require a crew of 20 to 40 people. Members of the construction crew would likely commute daily from Reno, Fallon, or from other populated places in the general area. Personal vehicles driven to and from the project area by the construction crew would be parked at the staging area during the workday. A port-a-john would be stored at the staging area for use by construction personnel. The port-a-john would be serviced by a local contractor and removed from the project area following construction. Trash would be removed from the project area; no trash would be buried or burnt at the project site.

Construction of the proposed project would occur Monday through Friday, and last for approximately 6 months. Construction would be permissible from half an hour after sunrise to half an hour before sunset, but would typically occur between 7:00 AM and 5:00 PM each work day. Construction on weekends and during night hours would be permissible if necessary, but is not anticipated.

Reclamation

Surface disturbance would be kept to a minimum while maintaining efficient and safe construction conditions. Any areas that are temporarily disturbed during construction of the proposed project would be reclaimed immediately after construction activities are completed. Following completion of construction, all project equipment and materials, except that needed to perform reclamation activities, would be removed from the site by the contractor. No solid waste or trash would be left or buried onsite. Erosion-control measures and best management practices would be maintained in place or installed as necessary during reclamation.

During the construction process, topsoil would be salvaged and stockpiled for use during reclamation. With the exception of the proposed road embankments, areas altered during construction would be graded to a final contour that blends with the surrounding topography. Topsoil stockpiled during construction would be applied to the reshaped surfaces and scarification would be performed as needed. After the reclaimed surfaces have been prepared, they would be seeded with the seed mix provided on the final design plans.

During vegetation establishment, weed control practices would be implemented to limit the growth and spread of noxious weeds and to ensure that seeding efforts are successful. The control practices may include, but are not be limited to, the use of weed-free straw in the reclamation program and testing the seed supply for noxious weeds seeds before planting. If noxious weeds are found, the seed would be rejected.

3.0 AFFECTED ENVIRONMENT

This chapter describes the environmental resources and components that would be potentially affected as a result of implementing the Proposed Action Alternative and the No Action Alternative.

3.1 LAND RESOURCES

(a) Topography

The Reservation is located within the Great Basin section of the Basin and Range Physiographic Province (U.S. Geological Survey 2002). The Basin and Range Physiographic Province is an expansive region of alternating, generally north-south-oriented, faulted mountains and flat valleys. The province was created about 20 million years ago as the earth's crust stretched, thinned, and then broke into some 400 mountain blocks that partly rotated from their original horizontal positions (U.S. Geological Survey 2000). Stretching and thinning was extensive in the Great Basin section. Blocks that have slipped downward at faults have formed the present-day valleys of the Great Basin. Present-day mountains ranges are formed from the blocks that remained intact (U.S. National Park Service 2001).

The majority of the project area is located on a high terrace above the former and the present floodplain of the Truckee River. The southernmost 600 feet of the project area are located within the former floodplain of the Truckee River. Topography within the project area consists primarily of flat to gently sloping terrain (Figure 4). Isolated steep slopes are found within the project area where the high terrace and former floodplain converge. These isolated steep slopes are the dominant topographic element within the boundaries of the project area. Tall peaks and ridges in the Pah Rah Range and Black Mountains, located west and east of the project area respectively, are the dominant topographic elements visible from the project area (Figure 1).

(b) Soils

Soils in the project area were mapped and defined by the Soil Conservation Service in the *Soil Survey of the Fallon-Fernley Area, Nevada, Parts of Churchill, Lyon, Storey, and Washoe Counties* (U.S. Soil Conservation Service 1975). As shown on Figure 5, the soil types that occur within the project area include:

- Patna sand, 0 percent to 2 percent slopes;
- Sagouspe loamy sand, saline, 0 percent to 1 percent slopes;
- Dithod loam, rarely flooded, 0 percent to 1 percent slopes;
- Dithod loam, slightly saline, rarely flooded, 0 percent to 1 percent slopes; and
- Tipperary sand, 2 percent to 8 percent slopes.

The paragraphs following Figure 5 provide a detailed description of each soil type.

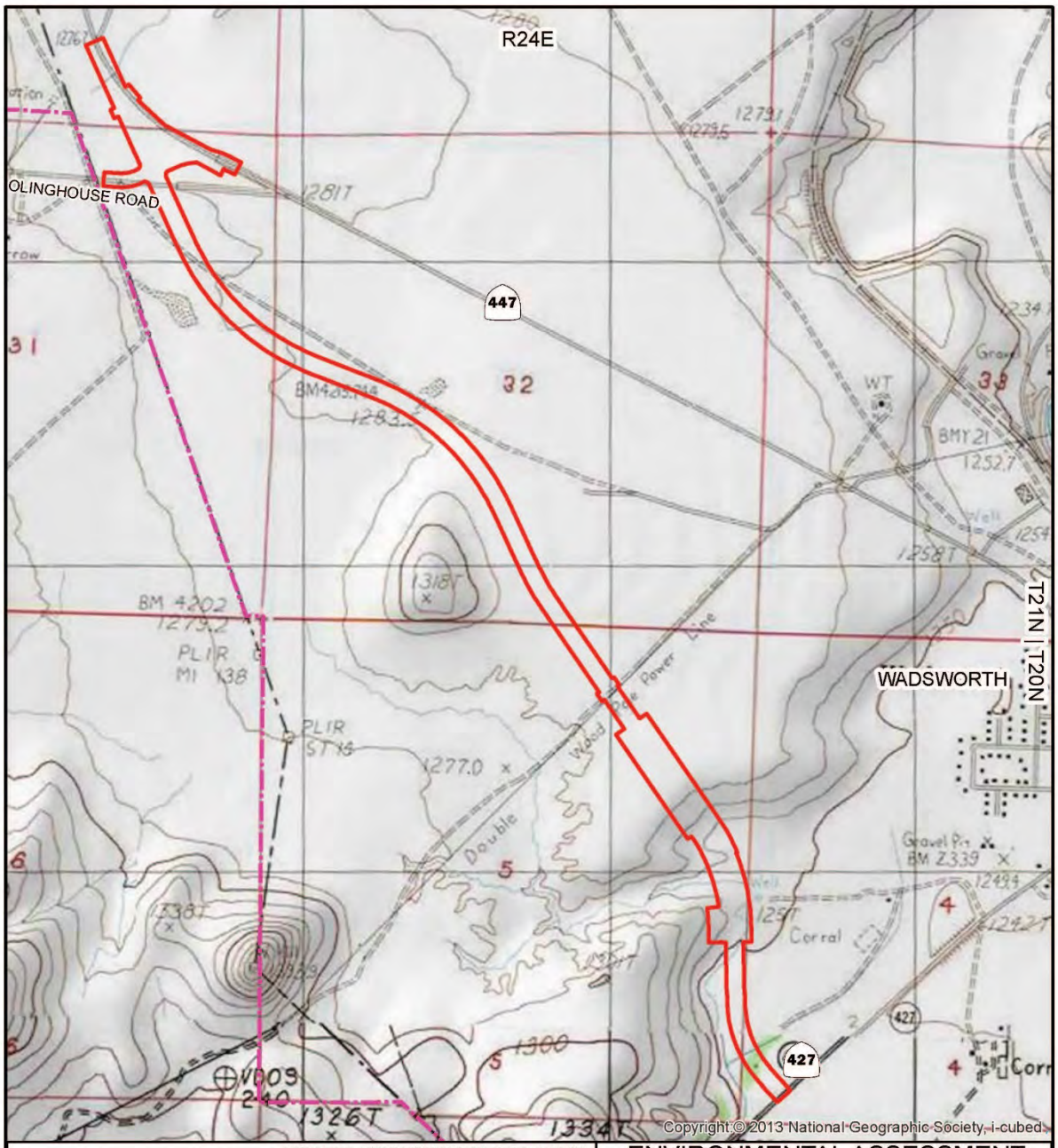

BASE MAP: USGS TOPOGRAPHIC QUAD (DRG)

PROJECT AREA

CONTOUR LINE (10 METER INTERVAL)

PYRAMID LAKE INDIAN RESERVATION BOUNDARY

0 750 1,500 3,000 FEET

N

ENVIRONMENTAL ASSESSMENT PLIR 35 (1) WADSWORTH BYPASS ROAD PROJECT

FIGURE 4
TOPOGRAPHIC MAP

BUREAU OF INDIAN AFFAIRS
WESTERN REGIONAL OFFICE
DIVISION OF TRANSPORTATION
2600 N. CENTRAL AVE., STE 150, FLOOR 13
PHOENIX, AZ 85004

DATE DRAWN: APRIL 22, 2016

SCALE: 1" = 1,500 FEET

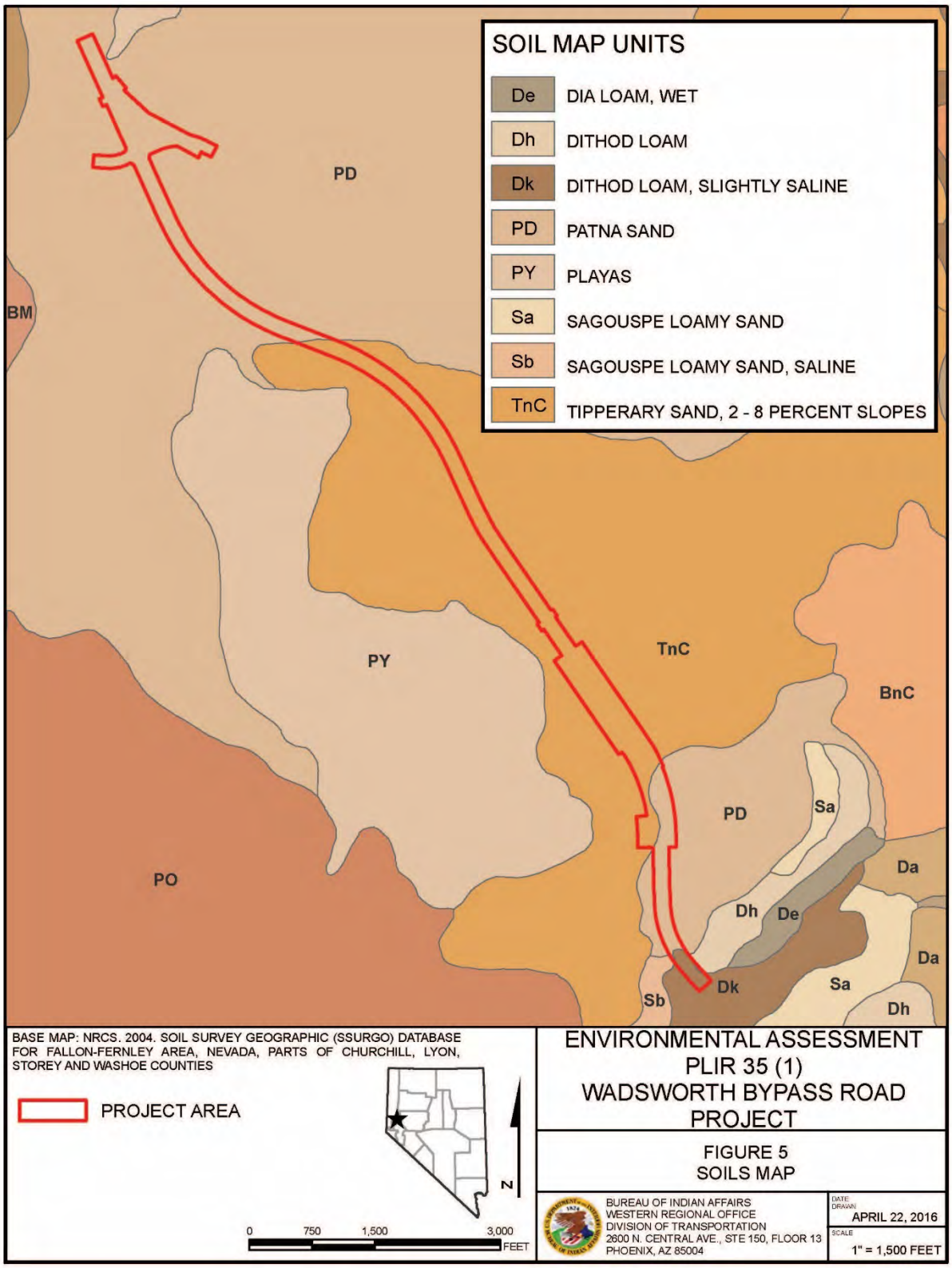
SOIL MAP UNITS
De DIA LOAM, WET
Dh DITHOD LOAM
Dk DITHOD LOAM, SLIGHTLY SALINE
PD PATNA SAND
PY PLAYAS
Sa SAGOUSPE LOAMY SAND
Sb SAGOUSPE LOAMY SAND, SALINE
TnC TIPPERARY SAND, 2 - 8 PERCENT SLOPES
PD
BM
PY
TnC
BnC
PD
Sa
Da
PO
Dh
De
Da
Sb
Dk
Sa
Dh
BASE MAP: NRCS. 2004. SOIL SURVEY GEOGRAPHIC (SSURGO) DATABASE FOR FALLON-FERNLEY AREA, NEVADA, PARTS OF CHURCHILL, LYON, STOREY AND WASHOE COUNTIES
PROJECT AREA
N
0 750 1,500 3,000 FEET
ENVIRONMENTAL ASSESSMENT
PLIR 35 (1)
WADSWORTH BYPASS ROAD PROJECT
FIGURE 5
SOILS MAP
BUREAU OF INDIAN AFFAIRS
WESTERN REGIONAL OFFICE
DIVISION OF TRANSPORTATION
2600 N. CENTRAL AVE., STE 150, FLOOR 13
PHOENIX, AZ 85004
DATE DRAWN
APRIL 22, 2016
SCALE
1" = 1,500 FEET

Patna Series

The Patna series consists of loamy sand and sandy soils that formed in reworked sandy deltaic deposits derived from mixed rock. The soils are somewhat excessively drained and very deep and are found on slightly convex to broad, smooth alluvial terraces. Slopes range from 0 to 2 percent. There is a moderate hazard for wind erosion of these soils. The average annual precipitation is between 4 and 6 inches, and the average annual air temperature is between 51 and 55 degrees Fahrenheit.

Dithod Series

The Dithod series consists of loam and fine sandy loam soils that formed in loamy alluvium derived from mixed rock. The soils are somewhat poorly drained and very deep, and found on smooth floodplains and low terraces. Slopes range from 0 to 2 percent. The hazard for erosion of these soils is none to slight, and runoff is very slow. The average annual precipitation is between 4 and 6 inches, and the average annual air temperature is between 51 and 55 degrees Fahrenheit.

Sagouspe Series

The Sagouspe series consists of loamy sand soils that formed in sandy alluvium. The soils are somewhat poorly drained and very deep, and found on smooth, low terraces. Slopes range from 0 to 2 percent. The hazard for erosion of these soils is slight, and runoff is slow. The average annual precipitation is between 4 and 6 inches, and the average annual air temperature is between 51 and 55 degrees Fahrenheit.

Tipperary Series

The Tipperary series consists of sandy soils that formed in sandy alluvium and aeolian deposits derived from mixed rocks. The soils are excessively drained and very deep, and found on smooth, high terraces and partly stabilized sand dunes. Slopes range from 0 to 15 percent. The hazard for erosion of these soils is high, and runoff is very slow. The average annual precipitation is between 4 and 6 inches, and the average annual air temperature is between 51 and 55 degrees Fahrenheit.

(c) Geologic Setting and Mineral and Paleontological Resources

The project area lies within the Great Basin section of Nevada's Basin and Range Province (U.S. Geological Survey 2002). The Nevada Bureau of Mines and Geology has mapped the geologic forms within the project area on the Geologic Map of the Wadsworth Quadrangle, Washoe County, Nevada (2005). The geologic forms mapped within the project area consist of Quaternary-aged alluvial material dominated by:

- Middle and late Pleistocene lacustrine alluvium associated with prehistoric Lake Lahontan;

- Holocene riverine alluvium associated with the Truckee River; and
- Late Pleistocene and Holocene alluvium from alluvial fan, eolian, playa, and landslides.

The northern half of the project area occurs entirely on late Pleistocene lacustrine alluvium, making it the predominant geologic form present. Alluvial material consists of a mix of mud, silt, sand, and clay. Holocene riverine alluvium is limited to the southernmost portion of the project area, where elevations are lowest and close to those of the former and present Truckee River floodplains (Nevada Bureau of Mines and Geology 2005).

Paleontological resources include fossil remains, specimen data, geological and geographic silt data, and the fossil-bearing rocks immediately underlying the surface. Fossils are the remains of ancient organisms (e.g., mammals, birds, reptiles, plants, and invertebrates) preserved in sedimentary strata of the earth's crust. Fossils are considered an important scientific resource because of their use in documenting the evolution of organisms, reconstructing the environments in which they lived, and determining geological events and age of the rock in which they occur.

Paleontological resources are protected by several federal state statutes, most notably by the 1906 Federal Antiquities Act, and other subsequent federal legislation and policies. In Nevada, paleontological resources are treated as prehistoric site remains and are protected under Nevada Revised Statutes, Chapter 383, Historic Preservation and Archaeology. Professional standards for assessing and mitigating adverse impacts on paleontological resources have been established by the Society of Vertebrate Paleontology. Recovery or removal of paleontological resources from Reservation lands would require authorization from the BIA and coordination with Pyramid Lake Paiute Tribe.

The potential for fossil remains at a location can be predicted through previous correlations that have been established between the fossil occurrence and the geologic formations within which they are buried. For this reason, knowledge of the geology of a particular area and the paleontological resource sensitivity of particular rock formations make it possible to predict where fossils will or will not be encountered. Quaternary deposits, particularly Holocene alluvium, are generally too young to yield fossils. Depositional forces of alluvial material are generally unsupportive of fossil formation. Paleontological resources are not known to exist within the project area.

3.2 WATER RESOURCES

Water resources include surface waters, groundwater, floodplains, and WOUS, as defined by the U.S. Army Corps of Engineers (USACE) and as regulated under the Clean Water Act. Wetland delineation specialists from Stantec investigated the project area for wetlands and other WOUS

on July 15, 2011. An irrigation ditch (Garavanta Ditch) located approximately 550 feet north of State Route 427 crosses the project area. The ditch was dry during a site visit in July 2011. Flowing water was observed in the ditch during a second site visit in August 2011. Water conveyed in the irrigation ditch is diverted from the Truckee River, and a portion of the irrigation water is typically returned to the river rather than applied to agricultural fields. Consequently, the irrigation ditch would be considered a WOUS subject to jurisdiction under Section 404 of the Clean Water Act. The ditch is approximately 6 feet wide. No other WOUS were identified within the project area.

(a) Groundwater Resources

The Reservation is located within the Truckee River Basin Hydrographic Region (Nevada Division of Water Resources 2010). The principal sources of groundwater in the region are valley-fill reservoirs formed from alluvium. The reservoirs beneath the centers of most of the valleys in the region are believed to be at least 500 feet thick. Within the Reservation, aquifers are very complex and unpredictable because of numerous fluvial clay lenses in the vadose zone (Pyramid Lake Paiute Tribe 2005). Most groundwater recharge is provided by precipitation in mountainous areas of the region, with water reaching the valley-fill reservoirs through seepage in streams on alluvial slopes and by underflow from the consolidated rock (Van Denburgh, Lamke, and Hughes 1973). The Western Regional Climate Center has collected weather-related data at the Wadsworth 4N, Nevada (268838) weather station for several decades. The average annual precipitation at the weather station is 5.51 inches, and the average annual snowfall is 1.9 inches (Western Regional Climate Center 2010). According to the Pyramid Lake Paiute Tribe (2005), some wells on the Reservation fail to yield a consistent water supply.

The project area is in the Tracy Segment Basin of the Truckee River Basin Hydrographic Region (Nevada Division of Water Resources 2010). According to Van Denburgh, Lamke, and Hughes (1973), groundwater quality in the Tracy Segment Basin is degraded by excessive hardness and specific conductance in several places. Although the U.S. Geological Survey's analysis of water quality is several decades old, data in the Pyramid Lake Indian Reservation Comprehensive Resource Management Plan, dated 2005, describe problems with drinking water quality within the Reservation (Pyramid Lake Paiute Tribe and Natural Resources Conservation Service). The Pyramid Lake Paiute Tribe also describes contaminant sources within the drawdown zone for some groundwater wells in the Reservation in the 2005 plan.

(b) Surface Water

The dominant surface waters on the Reservation are Pyramid Lake and the Truckee River. The Truckee River originates at the sole outlet of Lake Tahoe, below the dam on the west side of the lake near Tahoe City, California. The river ends at Pyramid Lake, which has no outlet and is the terminus of the Truckee River watershed. The river flows through Truckee, California, and

Reno, Sparks, and Wadsworth, Nevada, between its origin at Lake Tahoe and terminus at Pyramid Lake. There are no surface waters within the project area.

Within the last century, a number of dams and water diversions have been constructed along the Truckee River. The first substantial project was the construction of the Derby Dam in 1902. The dam was constructed to divert water from the Truckee River to Fallon, Nevada, for irrigation of the Newlands Project. No water rights were appropriated to the Pyramid Lake Paiute Tribe when the project began, and an average of 250,000 acre-feet of water per year was diverted by the dam between 1918 and 1970. By 1967, the water level in Pyramid Lake had dropped 80 feet and the lowermost reaches of the river were incised. Several small dams and diversion structures were also built on the Reservation for irrigation and erosion control. These include the Proctor Dam, Olinghouse #1 Dam, Fellnagle Dam, Gardella Dam, Olinghouse #3 Dam, Numana Dam, and Marble Bluff Dam. Most of these structures are in need of repair and/or redesign.

One actively operated irrigation ditch known as the Garavanta Ditch is located approximately 550 feet north of where State Route 427 crosses the project area. Water conveyed in the irrigation ditch is diverted from the Truckee River, and a portion of the irrigation water is typically returned to the river rather than applied to agricultural fields. Consequently, the irrigation ditch would be considered a WOUS subject to jurisdiction under Section 404 of the Clean Water Act. The ditch is approximately 6 feet in width. The historic Wadsworth Power & Light Co. Ditch also crosses the project area. However, this ditch is no longer actively used or operated.

The USACE channelized and straightened the lower Truckee River in the 1960s as part of an upstream flood control project. The loss of the natural channel, combined with several major flood events, resulted in rapid downward erosion of the channel and ultimately destabilized the lower reaches of the river. A few stretches of the river are beginning to equilibrate and heal from the straightening and downward erosion of the river channel during the 1960s. Other stretches are severely degraded and will require bioengineering and some structural restoration. Many stretches of the river are disconnected from the former floodplain, resulting in erosion of the channel banks as the river adjusts to its new base level. Consequentially, numerous reaches of the river are in a depositional phase because of the increased heavy sediment loads. High terraces that were once part of the floodplain are now removed from the floodplain.

The downward erosion of the Truckee River channel and loss of floodplain has reduced the natural occurrence of periodic inundation of the riparian area. This has reduced the extent of density of riparian vegetation along the river within the Reservation. This loss of riparian vegetation and the unstable channel morphology have affected water quality and temperature. Inadequate channel depth and lack of shaded banks has resulted in higher water temperatures and

decreased levels of dissolved oxygen. Urban development in Reno and Sparks and agricultural activities in Fernley have also contributed to degradation of water quality in the lower Truckee River. Salt and nutrient loads in water have intensified from agricultural runoff draining into the river and from treated municipal effluent discharges to the river upstream of Wadsworth. The Nevada Division of Environmental Protection (NDEP) and the U.S. Environmental Protection Agency designated the lower Truckee River as an Impaired Water Body in 2002, due to total phosphorus, turbidity, and temperature increases. Tributary flows from Steamboat Creek have also deposited mercury in the Truckee River.

(c) Floodplains

A review of the Federal Emergency Management Agency Flood Insurance Rate Maps (panels 32031C2950G and 32031C3131G) reveal that the floodplain has not been mapped within the limits of the Reservation. The maps do indicate that the Reservation has been classified as a Zone D area. A Zone D classification means that flood hazards are undetermined but possible.

The Pyramid Lake Paiute Tribe and the Natural Resources Conservation Service (NRCS) suggest that because Wadsworth is situated along the Truckee River as it bends north toward Pyramid Lake, it is susceptible to flooding during major upstream storm and runoff events (2005). Numerous stretches of the river are incised and disconnected from its once functional floodplain. This increases the risk of overbank flooding during storm events. High terraces that were once part of the floodplain are now removed from the floodplain. Rapid urban development in Reno and Sparks has converted many pervious surfaces to impervious parking lots, roads, and buildings, increasing the runoff reaching the Truckee River upstream of Wadsworth. The Pyramid Lake Paiute Tribe has delineated the 100-year floodplain of the Truckee River within the boundary of the Reservation and designated it as open space in its 50-Year Land Use Plan. Based on the delineation in the plan, the project area is not located in the 100-year floodplain.

3.3 AIR QUALITY

The Clean Air Act of 1970 (42 U.S. Code [USC] 7401 et seq.) required the U.S. Environmental Protection Agency to establish National Ambient Air Quality Standards (NAAQS) (40 CFR, part 50) for pollutants that are considered harmful to public health and the environment. Under the Clean Air Act, two types of NAAQS are identified: primary standards and secondary standards. Primary standards protect the health of the public, including the health of populations considered "sensitive", such as asthmatics, children, and the elderly. Secondary standards provided protection to the wellbeing of the public, which includes preventing decreased visibility and damage to animals, agricultural crops, vegetation, and buildings.

The U.S. Environmental Protection Agency has established NAAQS for six pollutants. These pollutants are referred to as “criteria pollutants” and include: sulfur dioxide (SO_2), carbon

monoxide (CO), nitrogen dioxide (NO_2), ozone (O_3), particulate matter, and lead (Pb). Particulate matter is subdivided into two categories: particulate matter under 10 microns in diameter (PM_{10}) and particulate matter under 2.5 microns in diameter ($PM_{2.5}$). The current NAAQS established for each criteria pollutant is provided in Table 7.

Table 7 NAAQS for Criteria Pollutants

Pollutant	Primary/ Secondary	Averaging Time(s)	NAAQS	Form
CO	Primary	8-Hour	9 parts per million	Not to be exceeded more than once per year
		1-Hour	35 parts per million	
Pb	Primary and secondary	Rolling 3-month average	0.15 micrograms per cubic meter of air	Not to be exceeded
NO_2	Primary	1-Hour	100 parts per billion	98th percentile, averaged over 3 years
	Primary and secondary	Annual	53 parts per billion	Annual mean
O_3	Primary and secondary	8-Hour	0.075 parts per million	Annual fourth-highest daily maximum 8-hr concentration, averaged over 3 years
$PM_{2.5}$	Primary and secondary	Annual	15 micrograms per cubic meter of air	Annual mean, averaged over 3 years
		24-Hour	35 micrograms per cubic meter of air	98th percentile, averaged over 3 years
PM_{10}	Primary and secondary	24-Hour	150 micrograms per cubic meter of air	Not to be exceeded more than once per year on average over 3 years
SO_2	Primary	1-Hour	75 parts per billion	99th percentile of 1-hour daily maximum concentrations, averaged over 3 years
	Secondary	3-Hour	0.5 parts per million	Not to be exceeded more than once per year

When the concentrations of criteria pollutants in a geographic area are less than the concentration levels established by the NAAQS, the area is considered to be in attainment. Conversely, an area is considered to be in nonattainment if concentrations of one or more criteria pollutants exceed the concentration levels established by the NAAQS.

Within Nevada, the geographic extent of an area's attainment classification corresponds to the Hydrographic Area boundaries that the Nevada Division of Water Resources established in 1979 (NDEP 2013). The project area is located in the Tracy Hydrographic Area in Washoe County. The NDEP, Bureau of Air Quality monitors ambient air quality in most Hydrographic Areas, with the only exceptions being areas within Washoe County and Clark County. In Washoe County, the Washoe County Health District, Air Quality Management Division monitors ambient air quality and administers air quality programs. According to the Air Quality Management Division (2013), the attainment status of the Tracy Hydrographic Area through 2012 was considered unclassifiable. An area is considered unclassifiable if no monitoring has

been performed to determine its classification status and violations of ambient air quality standards would not otherwise be expected (NDEP 2013).

Prevention of Significant Deterioration

The Prevention of Significant Deterioration Program is a Clean Air Act permitting system used by the U.S. Environmental Protection Agency when a new major stationary source of air pollution or major modification to an existing major source of air pollution is proposed. A "major stationary source" is defined in Section 302 of the Clean Air Act as any source type belonging to a list of 28 source categories which emits or has the potential to emit 100 tons per year or more of any pollutant subject to regulation under the Clean Air Act, or any other source type which emits or has the potential to emit such pollutants in amounts equal to or greater than 250 tons per year.

Under the program, an air quality analysis is required that includes an assessment of the existing air quality within the airshed where the major source or modification is proposed. Based on the assessment of the existing air quality, the U.S. Environmental Protection Agency designates the airshed as a Class I, Class II, or Class III area. Based on this designation, specific Prevention of Significant Deterioration increments defined in 40 CFR 52.21(c) are assigned to applicable pollutants, which currently includes $PM_{2.5}$, PM_{10}, NO_2, and SO_2. A Prevention of Significant Deterioration increment is the maximum allowable increase in the concentration of a pollutant that is allowed to occur above a baseline concentration for that specific pollutant. The baseline concentration is defined for each pollutant and, in general, is the ambient concentration that existed when the first complete Prevention of Significant Deterioration permit application affecting the area is submitted. Significant deterioration is said to occur when the amount of new pollution would exceed the applicable Prevention of Significant Deterioration increment. Regardless of whether all of the increment is consumed by a proposed major source or modification, the air quality cannot deteriorate beyond the current NAAQS. Prevention of Significant Deterioration increments are adopted by reference in Nevada Administrative Code (NAC) 445B.221.

The Tracy Hydrographic Area has been designated as a Prevention of Significant Deterioration area by the NDEP for PM_{10}, NO_2, and SO_2 pollutants (NDEP 2009). Additionally, the state of Nevada has designated the hydrographic area as a Class II area (NDEP 2013). The Class II Prevention of Significant Deterioration increment standards assigned to PM_{10}, NO_X, and SO_2 in 40 CFR Part 52.21(c) are provided in Table 8.

Table 8 Prevention of Significant Deterioration Increments

Pollutant	Averaging Time	Increment (µg/m3)*
PM_{10}	24-Hour	30

Pollutant	Averaging Time	Increment (µg/m3)*
	Annual	17
NO_X	Annual	25
SO_2	3-Hour	512
	24-Hour	91
	Annual	20

*Prevention of Significant Deterioration increment values based on Class II area as defined in 40 CFR 52.21(c).

According to the NDEP (2009), the Tracy Hydrographic Area is at or has surpassed the Prevention of Significant Deterioration increment for PM_{10}, NO_2, and SO_2 pollutants. Accordingly, NDEP requires emissions of these pollutants to be below their current NAAQS.

3.4 LIVING RESOURCES

(a) Ecosystems and Biological Communities

The majority of the project area is located on a high terrace above the former and the present floodplains of the Truckee River. The southernmost 600 feet of the project area are located within the former floodplain. Topography within the project area consists primarily of flat to gently sloping terrain (Figure 4). Isolated steep slopes are found within the project area where the high terrace and former floodplain converge. Elevations in the project area range from 4,080 feet above mean sea level up to 4,215 feet above mean sea level (U.S. Geological Survey 1985).

The ecological systems within the project area have been mapped as part of the U.S. Geological Survey Southwest Regional Gap Analysis Project (2004). The Inter-Mountain Basins Mixed Salt Desert Scrub ecological system is the predominant ecological system within the project area, covering all but the southern end of the project area. The Inter-Mountain Basins Mixed Salt Desert Scrub ecological system is extensive and includes open-canopied shrub cover of typically saline basins, alluvial slopes, and plains across the Intermountain West. The southern end of the project area has been converted to agriculture fields that have been traditionally planted with alfalfa.

(b) Vegetation

Biologists from Stantec visited the project area on July 13, 2011, to gather baseline biological data. The biologists recorded the vegetation species observed during this site visit and determined that there are two distinct vegetation communities in the project area. An agricultural field traditionally planted with alfalfa is also present. As shown on Figure 6, the agricultural field is located within the approximately first 400 feet of the project area north of State Route 427 and covers approximately 1.8 acres of the project area. Small, isolated patches of Woods' rose (*Rosa woodsii*) and the noxious weed species, tall whitetop (*Lepidium latifolium*), occur within the field.

The first distinct vegetation community identified by the biologists is located north of the agriculture field and south of an irrigation ditch (i.e., Garavanta Ditch) (Figure 6). The vegetation community is dominated by mature-aged Fremont cottonwood (*Populus fremontii*) that are likely supported by moisture supplied by the nearby the irrigation ditch. The understory is dominated by creeping wildrye (*Leymus triticoides*) and lacks a shrub component. There is approximately 0.7 acre of this vegetation community within the project area.

North of the irrigation ditch, the project area rises to a high terrace, and the vegetation community abruptly changes to a mixed salt desert scrub community. This community is present from the ditch to the far northern end of the project area, covering approximately 79.6 acres (Figure 6). The dominant species are Bailey's greasewood (*Sarcobatus baileyi*) and Nevada dalea (*Psorothamnus polydenius*). Shadscale saltbush (*Atriplex confertifolia*), spiny hopsage (*Grayia spinosa*), and rubber rabbitbrush (*Ericameria nauseosa*) were a common component of the species composition as well. Smooth horsebrush (*Tetradymia glabrata*) and winterfat (*Krascheninnikovia lanata*) were less common but consistently present across the entire vegetation community. Big sagebrush (*Artemisia tridentata*) individuals occur irregularly and infrequently. The herbaceous layer was sparse, and absent in many locations. Where present, the invasive species cheatgrass (*Bromus tectorum*) was generally dominant. The herbaceous layer also included Indian ricegrass (*Achnatherum hymenoides*) and yellow beeplant (*Cleome lutea*).

There are approximately 3.2 acres within the project area where vegetation cover does not exist. Examples include portions of the project area that have been developed with road surface, such as existing Olinghouse Road and State Route 447.

BASE MAP: 2015 NAIP IMAGERY

PROJECT AREA

VEGETATION COMMUNITIES/TYPES

AGRICULTURAL FIELD

MIXED SALT DESERT SCRUB COMMUNITY

FREMONT COTTONWOOD COMMUNITY

N

0 750 1,500 3,000 FEET

ENVIRONMENTAL ASSESSMENT
PLIR 35 (1)
WADSWORTH BYPASS ROAD
PROJECT

FIGURE 6
VEGETATION COMMUNITIES MAP

BUREAU OF INDIAN AFFAIRS
WESTERN REGIONAL OFFICE
DIVISION OF TRANSPORTATION
2600 N. CENTRAL AVE., STE 150, FLOOR 13
PHOENIX, AZ 85004

DATE DRAWN: APRIL 22, 2016

SCALE: 1" = 1,500 FEET

(c) Wildlife

General Wildlife

During the site visit on July 13, 2011, Stantec biologists recorded all wildlife species observed. Wildlife observed in and near the project area included various species of birds typical of western Nevada, including Western kingbird (*Tyrannus verticalis*), black-throated sparrow (*Amphispiza bilineata*), mourning dove (*Zenaida macroura*), house wren (*Troglodytes aedon*), and common raven (*Corvus corax*). Cliff swallow (*Petrochelidon pyrrho*nota) were observed flying over the project area. Mountain cottontail (*Sylvilagus nuttallii*) was the only mammal species observed during the site visit, but evidence (tracks and burrows) of kangaroo rat (*Dipodomys* sp.) was observed. Reptile species observed included long-nosed leopard lizard (*Gambelia wislizenii*) and Great Basin whiptail lizard (*Aspidoscelis tigris*).

Threatened, Endangered, and Sensitive Species

The USFWS was initially consulted for records of threatened, endangered, proposed, or candidate species within the project area and vicinity in 2011. In their first response, USFWS personnel indicated that to the best of their knowledge, no threatened, endangered, proposed, or candidate species occur within the project area. Their response includes a recommendation that should either bald eagles (*Haliaeetus leucocephalus*) or golden eagles (*Aquila chrysaetos*) occur in the project area or within 10 miles of the project area boundary, the potential project impacts on either or both species be analyzed. The bald eagle was removed from the federal list of threatened and endangered species in 2007. Golden eagles have not been included on the federal list of threatened and endangered species, nor are they proposed or a candidate for listing. Although neither is a federally listed species, protection of the bald eagle and golden eagle continues under the Bald and Golden Eagle Protection Act of 1940, as amended (16 USC 668-668d), and the Migratory Bird Treaty Act of 1918, as amended (16 USC 703 et seq.).

Bald eagles are generally found near seacoasts, rivers, lakes, and similar large bodies of water. The staple of the bald eagle diet is fish, but they will prey on a wide range of other animals, including fish, turtles, small or juvenile mammals, and invertebrates. Bald eagles will nest on cliffs but prefer nesting in tall trees in mature or old-growth forests with an open structure. Their nest sites are placed in proximity to large bodies of water (Peterson 1986). The Mid-Pacific Region of the Bureau of Reclamation reports that bald eagles utilize stretches of the Truckee River as wintering habitat. The Pyramid Lake Paiute Tribe and NRCS (2005) indicate that bald eagles occur on the Reservation. Golden eagles are found in open terrain of deserts, mountains, plateaus, and steppes and are typically not found in heavily forested areas. They prey mostly on medium-sized rodents, such as rabbits and hares, but also feed on birds, reptiles, and animal carcasses. Golden eagles build stick nests on cliffs, trees, or tall power pole structures.

It is unknown whether eagles occur within 10 miles of the project area boundary; however, no eagles were observed by Stantec biologists during the site visit on July 13, 2011. With the exception of residential and developed areas, most of the Reservation, including the entire project area, provides foraging habitat for golden eagles. It is unlikely that bald eagles would forage within the project area due to the absence of fish habitat and desirable prey. The project area does not contain nesting habitat for either eagle species, but suitable nesting habitat may exist within 10 miles of the project area. Approximately 27 miles of the Truckee River channel flow within 10 miles of the project area and could potentially be used as wintering habitat by bald eagle. The Pah Rah Range, Truckee Range, and Black Mountains are located approximately 5 miles from the project area and contain cliffs and rock outcrops that golden eagles could potentially use for nest sites. Although it is unknown if eagles actually occur in any of these area, it is assumed that they do for purposes of the analysis in this document.

The USFWS was consulted again in 2015 for an updated list of records of threatened, endangered, proposed, or candidate species within the project area and vicinity. Their response listed three species: greater sage-grouse (*Centrocercus urophasianus*), cui-ui (*Chasmistes cujus*), and Lahontan cutthroat trout (*Oncorhynchus clarkia henshawi*). An updated list of records for the project area was requested again in 2016. The USFWS 2016 list included only cui-ui and Lahontan cutthroat trout (Appendix B). Table 9 describes the habitat preferred by each of these species and a determination of whether the each would be likely to occur within the project area of not. Stantec biologists did not observe any of the species or habitat for the species listed in Table 9 during the site visit in July 2011.

Table 9 Listed, Proposed, and Candidate Species for the Project Area and Vicinity

Species	Status	Habitat Association	Potential to Occur in Project Area*
Greater sage-grouse (*Centrocercus urophasianus*)	Candidate	Mountains, foothills, and plains where sagebrush is present; dependent on sagebrush (Cornell University 2011).	Not present; project area lacks suitable sagebrush cover.
Cui-ui* (*Chasmistes cujus*)	Endangered	Endemic to Pyramid Lake; migrates up the lower reaches of the Truckee River to spawn, returns to lake (USFWS 2010a).	Not present; project area does not contain fish habitat. Project area is 0.5 mile from the Truckee River.
Lahontan cutthroat trout* (*Oncorhynchus clarki henshawi*)	Threatened	Cool flowing water with vegetated streambanks, large terminal alkaline lakes such as Pyramid Lake or Walker Lake, alpine lakes such as Lake Tahoe (USFWS 2010b).	Not present; project area does not contain fish habitat. Project area is 0.5 mile from the Truckee River.

*The Pyramid Lake Paiute Tribe and NRCS (2005) describe Lahontan cutthroat trout, Carson wandering skipper, and cui-ui as occurring on the Reservation. Table 9 describes the potential for species included in USFWS consultation to occur in project area only and does not necessarily dismiss occurrence of any species from other areas on the Reservation.

Migratory Birds

Migratory birds are defined in 50 CFR 10.12 as any bird, whatever its origin and whether or not raised in captivity, which belongs to a species listed in 50 CFR 10.13 and any bird that is a mutation or hybrid of any such species. The definition also applies to the nest, egg, or part of any such bird or any product, whether or not manufactured, that consists, or is composed in whole or part, of any such bird or any part, nest, or egg thereof. Migratory birds are protected under the Migratory Bird Treaty Act of 1918. This act prohibits killing or taking migratory bird species without a permit. Protection under the act extends to nesting birds and their eggs and to vegetation containing active nests of migratory birds.

With the exception of upland game birds such as chukar (*Alectoris chukar*) and introduced species such as European starling (*Sturnus vulgaris*), all bird species commonly found in Washoe County and on the Reservation are protected under the Migratory Bird Treaty Act. Avian species diversity and density in the area is greatest during spring and summer months, when migrant species are present. Species diversity decreases markedly during the fall and winter season, when many nesting species move south, off the Reservation and out of Washoe County. The species observed in or near the project area by biologists in July 2011 are migratory birds that would be capable of nesting in the area. Some of the other migratory bird species likely to nest in the area include American robin (*Turdus migratorius*), Brewer's sparrow (*Spizella breweri*), red-winged blackbird (*Agelaius phoeniceus*), barn swallow (*Hirundo rustica*), horned lark (*Eremophila alpestris*), sage sparrow (*Amphispiza belli*), sage thrasher (*Oreoscoptes montanus*), and western meadowlark (*Sturnella neglecta*). This list is only partial, and many more species of migratory bird would be expected to forage or possibly nest within the project area.

3.5 CULTURAL RESOURCES

(a) Cultural and Archaeological Resources

Kautz Environmental Consultants, Inc., accompanied by an archaeological monitor from the Pyramid Lake Paiute Tribe, performed a Class III cultural resource inventory for the project on July 11, 2011. The inventory area consisted of all areas within 200 feet of the centerline of the proposed bypass road and segment of Olinghouse Road that would be realigned. A total of seven isolated finds and 10 archaeological sites were recorded during the inventory. All of the documented archaeological sites date to the historic era, and include refuse scatters, historic road segments, a historic utility line segment, and segments of two historic canals (i.e. irrigation ditches). The two historic ditch segments were recommended as eligible for nomination to the National Register of Historic Places under Criterion A: Garavanta Ditch (site 26Wa9386) and Wadsworth Light and Power Co. Ditch (site 26Wa9388). The remaining eight archaeological sites and all seven of the isolated finds were recommended not eligible for nomination (Harmon & Harmon 2011). In a letter dated April 21, 2014, the Pyramid Lake Paiute THPO provided

concurrence with these recommendations. A copy of the letter from the THPO is provided in Appendix C.

Project engineers and designers determined that road construction would result in surface disturbance beyond areas within 200 feet of the centerline of the proposed bypass road and segment of Olinghouse Road that would be realigned. Accordingly, the size of project area was increased by 16.9 acres. The additional 16.9-acre area was surveyed and inventoried to Class III standards by Kautz Environmental Consultants, Inc. on September 23, 2013. The acreage is parsed into multiple small parcels, all of which are located directly adjacent to the area inventoried earlier in July 2011. One newly identified archaeological site and two previously identified archaeological sites were identified and documented during the cultural resources inventory of the 16.9-acre extension area. The newly identified site is a historic refuse "road toss" scatter. One of the two previously identified sites consists of a historic road segment with associated road toss. The other previously identified site is a multi-component site that combines a prehistoric flake scatter with a historic refuse scatter. All three sites were recommended not significant and not eligible for nomination to the National Register of Historic Places (Cole 2013). In a letter dated April 21, 2014, the Pyramid Lake Paiute Tribe THPO provided concurrence with these recommendations. A copy of the letter from the THPO is provided in Appendix C.

3.6 SOCIO-ECONOMIC RESOURCES

(a) Employment and Income

The Reservation is located in northwestern Nevada, approximately 35 miles northeast of Reno. The Reservation lies predominantly within Washoe County, but small portions also lie within Lyon and Storey Counties (Figure 1). Wadsworth is located in the southernmost portion of the Reservation, just north of Interstate 80. More than half of the Reservation residences are located in Wadsworth (Pyramid Lake Paiute Tribe and NRCS 2005). The project area is located entirely within Washoe County.

Numerous tribal facilities are located in Wadsworth, including the Interstate 80 Smoke Shop, the Big Bend Ranch and mobile home park, a youth treatment center, an elementary school, a post office, a community center, churches, and a day care facility. The community also includes the Paiute Pit gravel source, a sewage treatment plant, and a solid waste transfer facility. The center of the project area is located just west of the solid waste transfer facility. A portion of the transfer station immediately adjacent to the project area has been reclaimed. The reclaimed portion of the transfer station is essentially an area where solid waste has been covered or buried with a layer of soil and subsequently vegetated.

Fisheries operations, sport fishing, and recreational activities at Pyramid Lake fuel much of the Reservation economy. Permits are sold to the general public wishing to use the lake. Tax revenue and lease revenue contribute to the reservation economy alongside permit fees. Agricultural and ranching activities on the Reservation also provide some income.

Approximately 66 percent of the tribal members were employed in 2000; approximately 34 percent were unemployed (Pyramid Lake Paiute Tribe 2011). Approximately 25 percent of the population works directly for Pyramid Lake Paiute Tribe tribal government or other government operations (Pyramid Lake Paiute Tribe and NRCS 2005). Other common employment occupations include office and sales occupations, construction, agriculture and forestry, service industries, and professional or management occupations. The proximity of Wadsworth to Interstate 80 provides residents of the community with a relatively easy commute to jobs in Reno and Sparks.

Some tribal members also generate income as roadside vendors that offer primarily food products to persons travelling on roads within and near Wadsworth. Roadside vending is generally a seasonal, temporary, or otherwise irregular source of income that coincides largely with periods of increased tourism, such as the fishing season at Pyramid Lake or during the annual Burning Man event north of Wadsworth.

(b) Demographic Trends

The demographic composition of the project area was determined by using the Census 2010 Summary File 1 (U.S. Census Bureau 2010b). In 2010, the U.S. Census Bureau estimated the Reservation population at 1,654 persons, with the Native American population accounting for an estimated 1,268 (77 percent) of those persons. White and Hispanic populations comprise most of the remaining racial composition of the Reservation. The majority of the population is young, comprising individuals under age 35. The median age is 32 (Pyramid Lake Paiute Tribe and NRCS 2005).

More than half of the Reservation members reside in Wadsworth, as do numerous people who are not members of the Pyramid Lake Paiute Tribe. The U.S. Census Bureau (2010a) estimated that the population of Wadsworth was approximately 834 individuals in 2010 but indicated a 173-person margin of error. The Pyramid Lake Paiute Tribe and NRCS (2005) suggest that the population is expected to grow to 2,200 inhabitants by 2025.

The project area is located west of Wadsworth, where land is undeveloped with the exceptions of utility lines, unpaved roads, an existing solid waste transfer station, and a reclaimed solid waste landfill area. There are no residences in the project area. The closest residence is approximately 2,500 feet west of the project area. Census data at the tracts and block group level was not

relevant or helpful for the purposes of this evaluation due to the uninhabited nature of the project area.

(c) Environmental Justice

Title VI of the Civil Rights Act of 1964 and Executive Order 12898 give guidance on identifying sensitive populations to ensure that individuals are not excluded from participation in, denied the benefit of, or subjected to discrimination under any program or activity on the basis of race, color, national origin, age, sex, or disability. Executive Order 12898 directs federal agencies to identify and address disproportionately high and adverse human health and environmental impacts on minority and low-income populations. According to the U.S. Environmental Protection Agency (2010), approximately 18 percent of Reservation residents are below the poverty level. Approximately 79 percent of the Reservation population is minority (U.S. Environmental Protection Agency 2010).

(d) Indian Trust Assets

Indian Trust Assets are legal interests in assets held in trust by the U.S. government for Indian tribes or individuals. Assets can be real property, physical assets, or intangible property rights. Indian Trust Assets cannot be sold, leased, or otherwise encumbered without the approval of the U.S. government. A trust relationship is established through a congressional act or Executive Order, as well as by provisions identified in historic treaties. As trustee, the Department of the Interior is legally obliged to fulfill treaty and statutory obligations and to manage, protect, and conserve Indian Trust Assets and lands in utmost good faith.

Lands associated with a reservation, ranch, or public domain allotments are examples of Indian Trust Assets. Resources located on Native American reservations, including timber, minerals, oil and gas, or similar, are also considered Indian Trust Assets. Treaty rights and water rights, as well as hunting and fishing rights, may also be Indian Trust Assets. Additional assets consist of financial capital in trust accounts.

(e) Lifestyle and Cultural Values

The land comprising the Reservation was reserved for the Pyramid Lake Paiute Tribe in 1859 by the U.S. Commissioner of Indian Affairs. In 1874, President Ulysses S. Grant signed an Executive Order confirming the status of the Reservation. It is governed by 10 Tribal Council members consisting of the Tribal Chairman, a vice-chairman, and eight Council members. The Council members are elected biannually in December and serve for staggered two-year terms. The Tribe operates under the Indian Reorganization Act Constitution and By-Laws approved on January 26, 1936, by the Department of Interior. The Pyramid Lake Paiute Tribe facilitates a government-to-government relationship with the federal government, which recognizes the federal trust responsibilities to the tribe.

There are three communities within the Reservation: Sutcliffe, Nixon, and Wadsworth. Nixon is the seat of the Pyramid Lake Paiute Tribe tribal headquarters and includes the tribal administration offices, housing authority, the tribal police, tribal court, and the Natural Resources Division. Sutcliffe is located on the west side of Pyramid Lake and is the main access location for recreational use of the lake. More than half of the Reservation population resides in Wadsworth. Modern amenities are available in Wadsworth. The town of Fernley is less than 4 miles from Wadsworth and provides several additional options for shopping, dining, and employment. Interstate 80 is located just south of Wadsworth and provides an economic opportunity for commercial, transportation, and tourism enterprises.

Few, if any, members of the Pyramid Lake Paiute Tribe pursue a traditional lifestyle consisting of subsistence hunting or fishing. Some Reservation residents have small agricultural assignments along the Truckee River, and some engage in ranching activities. However, most tribal members currently pursue a lifestyle nearly identical to the non-tribal residents of the area with employment in Reno or Fernley, or with the tribal government.

The Reservation and its surrounding lands are the ancestral homeland for the Paiute people. The lake and many other sites have sacred and cultural importance to the tribe. The Pyramid Lake Paiute Tribe's ceremonial, cultural, and spiritual ties to the Creator are maintained through nature and the natural resources it provides. Native American people are tied to the land and most still live in the area of their ancestral homelands. Tribal members use many species of plants for native foods, fiber, dyes, and medicine. Any land use or development must consider the desires and values of the tribal people and the potential impacts on their culture and heritage.

(f) Community Infrastructure

Most major utilities are available on the Reservation, including electricity, telephone, cable, and sewer. Existing utilities in the vicinity of the project area include overhead power lines owned and maintained by NV Energy and agricultural irrigation ditches. Transportation networks are discussed in Section 3.7(f).

3.7 RESOURCE USE PATTERNS

(a) Hunting, Fishing, and Gathering

As the residential and commercial core of the Reservation, the Wadsworth community is too populated and developed for hunting to be performed safely. Given the project's proximity to Wadsworth as well as a solid waste transfer facility and several existing roads, the project area would be an unsafe place for firearms to be operated, and hunting opportunities would be degraded.

Fishing is far more popular than hunting on the Reservation. The Pyramid Lake fishery has been labeled the most beautiful desert lake in the U.S. and consistently produces large trout. These conditions attract a substantial number of fishermen, including tribal members and non-tribal members. The Truckee River is also a valuable fishery and provides quality fishing. There are no waters suitable for fishing or fish habitat in the project area.

Many members of the Reservation gather various species of plants for traditional foods, fibers, dyes, and medicines. The species needed for food and subsistence items are found in riparian and wetland, montane, and desert habitat. The Pyramid Lake Indian Reservation Comprehensive Resource Management Plan (Pyramid Lake Paiute Tribe and NRCS 2005) provides a partial list of the many species gathered by the tribe. Some of the species listed were observed by Stantec biologists during the July 2011 site visit and are not atypical of high desert valleys in northwestern Nevada. These species include Indian ricegrass, Mormon tea (*Ephedra sp*.), sagebrush, Woods' rose, and yellow beeplant.

(b) Timber Harvesting

There are no timber-harvesting operations on the Reservation. The project area contains several individual Fremont cottonwood trees next to an irrigation ditch, but these trees are not managed for timber production.

(c) Agriculture

Small farms and ranching provide some income for the agricultural segment, dominantly through the sale of hay and cattle. Most agricultural land assignments are located near the Truckee River, where irrigation ditches are used for watering. Currently approximately 935 acres of irrigated land are in production of forage crops and are operated by individual assignment holders. Recent land acquisitions by the tribe in the Wadsworth region have contributed an additional 530 acres of potentially irrigable land. Another 395 acres of land, along existing irrigation ditches, have been identified as suitable for clearing and leveling, if sufficient water rights are available for irrigation. The southernmost part of the project area crosses an agricultural lease containing an irrigation ditch and irrigated agricultural field (Figure 2). The total area of the agricultural field is approximately 42 acres. Approximately 1.8 acres of the total area of the field occur within the project area.

Farmland Protection Policy Act

The Farmland Protection Policy Act (FPPA) (7 CFR 658) is intended to minimize the irreversible conversion of farmland to nonagricultural uses resulting from federal programs and projects that are completed by a federal agency or with federal funding or assistance. For the purpose of FPPA, farmland includes prime farmland, unique farmland, and land of statewide or local importance. Farmland subject to FPPA requirements does not have to be currently used for

cropland or agriculture. It can be forest land, pastureland, cropland, or other land, but not water or urbanized land.

The NRCS administers the FPPA as it relates to the protection of farmland. Consultation with the NRCS, Minden Soil Survey Office was performed in February 2012 in order to identify any farmland within the project area that is subject to the requirements of the FPPA. The letter of response provided from the NRCS during consultation is included in Appendix D of this document. In its response, the NRCS identified approximately 3.2 acres of land within the project area as farmland subject to the requirements of the FPPA.

(d) Mining

There are several abandoned mines on the Reservation, but none are within the project area. There are no active mines on the Reservation. There are two commercial rock and mineral extraction areas on the Reservation. Neither of these extraction areas is located within the project area. The rock and gravel extraction site nearest to the project area is the Paiute Pit gravel source. This gravel source is located approximately 1.25 miles east of the project area.

(e) Recreation

No community parks, sporting facilities, or other designated recreational amenities occur within the project area. The general area is undeveloped, open land that may be used for dispersed recreation.

(f) Transportation Networks

Arterial roads serve as the principal roadways on the Reservation, providing access from Reno, Sparks, and Interstate 80 to Pyramid Lake, Wadsworth, Nixon, Sutcliffe, and numerous locations north of the Reservation. State Routes 427 and 447 are arterial roads that occur in Wadsworth. State Route 427 can be accessed from two exits on Interstate 80. The route provides direct access to Wadsworth and the southernmost part of the Reservation. State Route 427 continues south of Interstate 80 east of Wadsworth, into central Fernley. State Route 447 begins at an intersection with State Route 427 in Wadsworth and continues north to Nixon where it intersects State Route 446 before continuing north, off of the Reservation. State Route 447 is most likely to handle travelers destined for Pyramid Lake or points north of the Reservation from Fernley and locations further east. The annual Burning Man event occurs north of the Reservation, and attendance is on the scale of tens of thousands of people. State Route 447 is one of the two routes that almost all attendees of the event travel to reach the event site. Some attendees drive large vehicles to the festival, including buses and campers. Other attendees decorate their vehicles; sometimes decorations can be sizable and protrude several feet or more from the vehicle. Heavy trucks also routinely use State Route 427 and 447 to access mineral exploration and mining sites north and northwest of the Reservation. Existing roads are shown on Figure 1.

Existing traffic volume for State Route 427 and State Route 447 are presented in Table 10. The table also presents the projected traffic volume based on a 2 percent growth over 20 years for both roads. Existing traffic volumes were collected during July 2011 when the Natchez Elementary School was not in session. Traffic associated with the school would continue to use State Route 447 following construction of the proposed road. Thus, existing and projected traffic volumes presented in Table 10 are representative of the traffic that would be anticipated to shift to the proposed road.

Table 10 Existing and Projected Traffic Volume

Road Name	Road Section	2011 Existing Volume (Daily Vehicle Trips)	2031 Projected Volume (Daily Vehicle Trips)
State Route 427	West of State Route 447	2,583	3,838
State Route 447	Between 4th and 5th Street	2,287	3,398

Source: (Fehr & Peers 2011)

The remainder of the roads in the Wadsworth area includes paved and unpaved collector roads and unpaved secondary roads. Paved collector roads provide access between residences in Wadsworth and arterial roads State Route 427 and State Route 447. Olinghouse Road is a principal unpaved collector road in the area that is routinely travelled (Figure 1). Secondary roads connect collector and arterial roads to various locations that are generally located outside of the Reservation boundary or to undeveloped locations on the Reservation.

The project area includes short segments of State Routes 427 and 447 and Olinghouse Road where the proposed road would intersect them. There are also several unpaved secondary roads that cross the project area. These roads do not provide access to any known unique site.

(g) Land Use Plans

The Pyramid Lake Paiute Tribe Transportation Plan (Ayala & Associates 2004) was developed to assist in identifying where road and transportation improvements on the Reservation were needed to provide sustainable future economic growth. A north/south-aligned road corridor is shown west of Wadsworth between State Routes 427 and 447 in the Transportation Plan. The proposed alignment is west of the corridor shown in the plan, but the Transportation Plan was prepared as a general planning tool and is subject to refinement during final design and engineering of specific projects included in the plan.

The Pyramid Lake Paiute Tribe and the NRCS prepared the Comprehensive Resource Management Plan for the Reservation in 2005. The plan builds on several other plans that had previously been developed for the Reservation, including the Transportation Plan and several 50-year land use plans specific to each community or resource area on the Reservation. According

to the Comprehensive Resource Management Plan, industrial and commercial uses are planned within the project area. The proposed north-south road corridor shown in the Transportation Plan is included in the Comprehensive Resource Management Plan and would be the primary access to the planned commercial and industrial developments.

3.8 OTHER VALUES

(a) Wilderness

There are no areas within the project area or the Reservation that have been designated as Federal Wilderness Areas. The nearest of these areas is the Desolation Wilderness, approximately 65 miles southwest of the project area, near Lake Tahoe in California. There are no designated Wild and Scenic Rivers within or near the project area.

(b) Noise and Light

The project area is located in a rural area of the Reservation and does not contain any residences, schools, religious facilities, or other sites which might typically be considered sensitive noise receptors. The nearest sensitive receptor is a single residence located north of State Route 427, approximately 1,100 feet west of the intersection of State Routes 427 and 447. This residence is approximately 1,450 feet east of the project area. The next closest residence to the project area is located on the cul-de-sac of 4th Street in Wadsworth, approximately 1,560 feet east of the project area. The Natchez Elementary School is the only non-residential sensitive receptor in the area, and it is located approximately 4,260 feet east of the project area.

Existing ambient noise levels within the project area and at the aforementioned sensitive receptor sites are governed primarily by traffic on nearby roads. Most traffic in the area is generally travelling on Interstate 80, State Route 427, and State Route 447. The existing solid waste transfer station located approximately 1,000 feet east of the project area also contributes to ambient noise levels in the area during the daytime, which is when the facility is operated. Other dispersed, low, and intermittent sources of noise include occasional maintenance of overhead power lines and poles, vehicle travel on unpaved roads, and wind.

The existing ambient day-night average sound level (Ldn) at the Natchez Elementary School and each of the aforementioned residences is identified in Table 11. The Ldn is the average noise exposure over a period of 24 hours, with noises during the nighttime period increased by 10 decibels (dB) to reflect the greater disturbance potential from nighttime noise (Sutter County 2011). The Ldn at each receptor site was calculated using the FHWA's Traffic Noise Model (TNM) because road traffic is the prominent source of ambient noise at each site. The TNM is a computer program designed for predicting noise impacts in the vicinity of highways based on user-defined variables, including traffic volume, vehicle types, weather conditions, topographic relief, vegetation cover, and so forth (FHWA 2011b). The traffic volumes input for project

calculations were derived from the average annual daily trips reported by NDOT (2013) for State Routes 427 and 477 and Interstate 80 near Wadsworth between 2003 and 2012. Default TNM values for atmospheric temperature and relative humidity were used.

Table 11 Existing Ambient Day-Night Average Sound Level (Ldn)

Receptor Site	Ambient Noise Level	Comparable Noise Source*
Natchez Elementary School	53.5 dB	Quiet Office (50 to 60 dB); Normal Conversation (50 to 65 dB)
State Route 427 Residence	47.2 dB	Quiet Office (50 to 60 dB); Rainfall (50 dB)
4th Street Residence	44.5 dB	Refrigerator Humming (40 dB)

*Source: (National Institute on Deafness and Other Communication Disorders 2010) and (American Tinnitus Association 2013).

There are no fixed, permanently mounted light sources in the project area. The only source of light shining directly into the project area is overcast from vehicle lights travelling at night on State Routes 427 and 447, Interstate 80, Olinghouse Road, or other unpaved roads near the project area. Lights in residential areas of Wadsworth are visible from within the project area.

(c) Visual

The visual character of the project area is rural, undeveloped land with existing roads, overhead transmission lines, and a solid waste transfer station as the dominant manmade features in the immediate foreground. Low desert shrubs covering flat to gently sloping terrain typify all but the southernmost portion of the project area between the irrigation ditch and State Route 427. This area is characterized by several tall cottonwood trees and open agricultural fields. The landscape beyond the project area is dominated by similar characteristics for thousands of feet. Distant views are dominated by the tall, rugged mountain peaks of the Virginia Range and Black Mountains to the east and west, respectively. Interstate 80 and distant mountains south of Interstate 80 dominate the view to the south (Figure 1). Wadsworth is visible from the southern portions of the project area.

The project area would be visible from many of the tall peaks that can be seen from Wadsworth in the distant Virginia Range and Black Mountains. Portions of the project area, generally south of the irrigation ditch, would be visible to people travelling on Interstate 80 and people in Wadsworth.

(d) Public Health and Safety

The Pyramid Lake Tribal Police and the Tribal Rangers are responsible for enforcement of laws on the Reservation. Fire suppression and control activities are the responsibility of the Pyramid Lake Fire Department. Police and fire departments from neighboring areas, such as Fernley or Sparks, provide support or additional services when necessary.

Hazardous Materials

The U.S. Environmental Protection Agency's EnviroMapper (2014) was used to query several federal environmental databases to identify, to the extent feasible, any recognized environmental conditions in connection with the project area. The surrounding area within 0.5 mile of the project area boundary was also included in the query. The query was performed on February 13, 2014. The query of federal environmental databases did not identify any recognized environmental conditions in connection with the project area or the surrounding area within approximately 0.5 mile of the project area. Federal environmental databases that were queried included the following:

- **Aerometric Information Retrieval System –** database of facilities regulated by the U.S. Environmental Protection Agency that release pollutants into the air.

- **Assessment, Cleanup and Redevelopment Exchange System** – database for Brownfields Grantees to electronically submit data directly to the Environmental Protection Agency. Brownfields are of real properties regulated by the Environmental Protection Agency where the expansion, redevelopment, or reuse may be complicated by the presence or potential presence of a hazardous substance, pollutant, or contaminant.

- **Comprehensive Environmental Response, Compensation, and Liability Information System –** official repository for site and non-site specific Superfund data in support of the Comprehensive Environmental Response, Compensation, and Liability Act. Superfund is a program administered by the U.S. Environmental Protection Agency to locate, investigate, and clean up the worst hazardous waste sites throughout the U.S.

- **National Priorities List –** list of national priorities among the sites of known releases or threatened releases of hazardous substances, pollutants, or contaminants throughout the U.S. and its territories.

- **Permit Compliance System and Integrated Compliance Information System** – databases of facilities regulated by the Environmental Protection Agency that discharge to U.S. waters and hold National Pollutant Discharge Elimination System permits.

- **Radiation Information Database** – database of facilities that are regulated by the Environmental Protection Agency's regulations for radiation and radioactivity.

- **Resource Conservation and Recovery Act Information** – a national program management and inventory system of hazardous waste generators, transporters, treatment facilities, storage facilities, disposal facilities, and facilities that otherwise handle hazardous waste.

- **Toxic Release Inventory** – database of facilities regulated by the Environmental Protection Agency that release toxic substances into the environment, either from air emissions, surface water discharges, land releases, underground injections, or transfers to off-site locations.

- **Toxic Substances Control Act** – database of facilities regulated by the Environmental Protection Agency that produce, import, use, and dispose of specific toxic substances including polychlorinated biphenyls, asbestos, radon and lead-based paint.

Several environmental databases managed by the NDEP, Bureau of Correction Actions were also queried, including:

- Database of federally regulated underground storage tanks (2014a);
- Database of corrective action (non-regulated) active sites (2014b); and
- Database of corrective action closed sites (2014c).

All NDEP, Bureau of Corrective Action databases were queried on February 14, 2014; however, the databases were last updated on January 29, 2014. No federally regulated underground storage tanks sites or corrective action sites were identified within the boundaries of the project area. One federally regulated underground storage tank site was identified approximately 0.2 mile southwest of the project area, near the interchange of State Route 427 and Interstate 80. One corrective action active site was identified approximately 0.25 mile north of the project area. The site is reported as a diesel spill that occurred in association with a tractor trailer travelling on State Route 447. The spill is reported to have occurred in 1999. Stantec biologists did not observe any hazardous materials or evidence (e.g., odors, soil staining, vegetation stress, oil sheen, etc.) of past storage or spills of any such materials within the project area during the site visit in July 2011.

The NDEP, Bureau of Waste Management's list of solid waste management facilities (NDEP 2015b) was queried to identify any known active landfill sites within the project area or the surrounding vicinity within 0.5 mile of the project area boundary. The database was last updated on November 10, 2015. No active landfill sites were identified through the query. However, a solid waste transfer station is located west of the project area and east of State Route 447. Hazardous wastes are not permitted to be disposed of, or handled, at the transfer station.

The NDEP, Bureau of Waste Management's list of closed landfill facilities (NDEP 2015a) was also queried to identify sites within the project area or surrounding vicinity within 0.5 mile of the project area boundary. The reclaimed landfill adjacent to the project area and active transfer station was identified in the database. According to the database, the landfill is now closed but was permitted and operated as a class II landfill when it was active. Per NAC 444.571, a class II landfill accepts less than 20 tons of solid waste per day on an annual average.

Greenhouse Gases

Greenhouse gases (water vapor, carbon dioxide, ozone, etc.) trap the sun's energy in the earth's atmosphere rather than allowing it to escape back to space. This phenomenon is commonly

called the “greenhouse effect.” Without the greenhouse effect, the planet would be too cold to support life. Human-caused emissions of these gases are thought to raise the temperature of the earth’s atmosphere, a condition that could lead to undesirable environmental consequences. Transportation accounts for approximately 29 percent of the human-caused greenhouse gas emissions (FHWA 2010). The project area intersects State Routes 447 and 427 at its northern and southern ends, respectively. These roads, and Interstate 80 south of Wadsworth, are the major transportation thoroughfares in the area.

4.0 ENVIRONMENTAL CONSEQUENCES

This chapter analyzes and describes the potential consequences that either alternative would have on the issues and resources discussed in the previous chapter. The analysis of potential consequences includes both beneficial and adverse effects on the human environment that would be likely and the short-term and long-term, direct and indirect, and cumulative impacts those effects would have on resources. Detailed consideration is given to resources that have a potential for environmental effects. Interpretation of impacts in terms of their duration, intensity, and scale are provided where possible.

Direct effects are caused by the action and occur at the same time and place. (40 CFR 1508.8). Indirect effects are caused by the action and are later in time or farther removed in distance, but are still reasonably foreseeable. Indirect effects may include growth inducing effects and other effects related to induced changes in the pattern of land use, population density or growth rate, and related effects on air and water and other natural systems, including ecosystems (40 CFR 1508.8).

Cumulative effects are the direct and indirect effects of the incremental impacts resulting from an action, decision, or project when added to other past, present, and reasonably foreseeable actions, regardless of what agency or person undertakes such other actions (40 CFR Part 1508.7). Guidance for implementing NEPA requires that federal agencies identify the temporal and geographic boundaries within which they will evaluate potential cumulative effects of an action and the specific past, present, and reasonably foreseeable projects that will be analyzed. Unless otherwise stated, the temporal boundary for the cumulative effects analysis is 20 years from commencement of project construction activities. The majority of effects from the proposed project are temporary occurring during the construction period, which is anticipated to last 6 months. Effects that would continue after construction is completed, such as alterations of visual resources, would be anticipated to diminish over time as the road ages and the surrounding resources become acclimated to its presence. Maintenance of the proposed project would be on-going as needed during the temporal boundary but would be anticipated to occur infrequently. The geographic boundary, hereby referred to as the cumulative effects analysis area, is shown on Figure 7. The cumulative effects analysis area includes all areas within the boundaries of the Reservation between the Pah Rah Range and the Black Mountains that are south of the intersection of an unnamed road and State Route 447 located about 1 mile north of the intersection of Olinghouse Road and State Route 447.

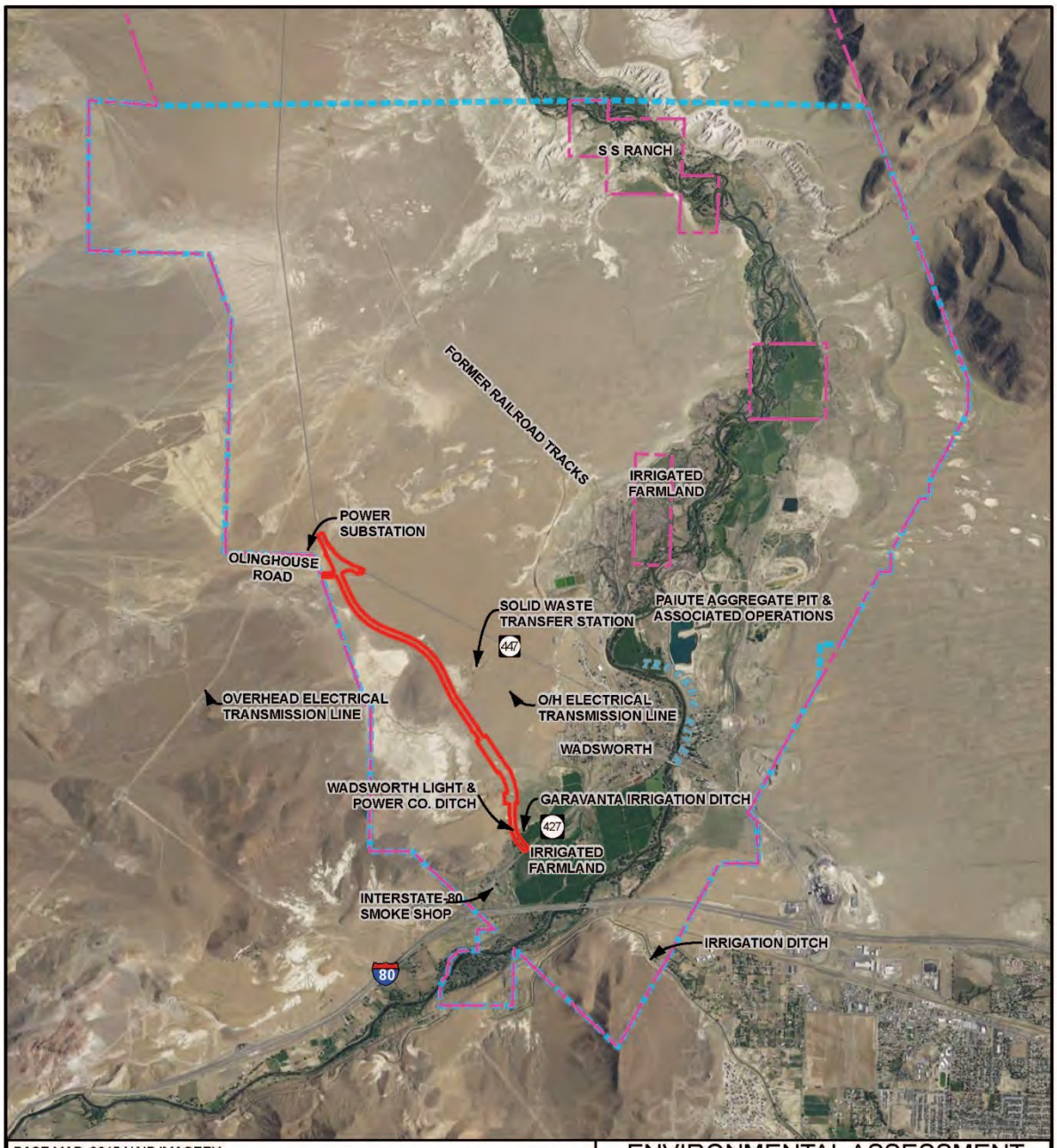

BASE MAP: 2015 NAIP IMAGERY

CUMULATIVE EFFECTS ASSESSMENT AREA

PROJECT AREA

PYRAMID LAKE INDIAN RESERVATION BOUNDARY

N

0 2,500 5,000 10,000 FEET

ENVIRONMENTAL ASSESSMENT PLIR 35 (1) WADSWORTH BYPASS ROAD PROJECT

FIGURE 7 CUMULATIVE EFFECTS ASSESSMENT AREA

BUREAU OF INDIAN AFFAIRS
WESTERN REGIONAL OFFICE
DIVISION OF TRANSPORTATION
2600 N. CENTRAL AVE., STE 150, FLOOR 13
PHOENIX, AZ 85004

DATE DRAWN: APRIL 22, 2016

SCALE: 1" = 5,000 FEET

Terms referring to impact intensity, context, and duration are used in the analyses of potential consequences and effects. The following are standard definitions for these terms.

Negligible: The impact is at the lower level of detection, and there would be a small change.

Minor: The impact is slight but detectable, and there would be a small change.

Moderate: The impact is readily apparent, and there would be a permanent measurable change.

Major: The impact would be highly noticeable, and there would be a permanent measurable change.

Localized impact: The impact occurs in a specific site or area. When comparing changes to existing conditions, the impacts are detectable only in the localized area.

Short-term Impact: The effect occurs only during or immediately after implementation of the alternative.

Long-term Impact: The effect could occur for an extended period after implementation of the alternative. The effect could last several years or more and could be beneficial or adverse.

The nature and duration of effects of each alternative are described in the following sections.

4.1 LAND RESOURCES

(a) Topography

No Action Alternative

The No Action Alternative would not require grading or any earth-moving activities within the project area. This alternative would not result in any alteration of the existing topography or ground elevations within the project area. Therefore, the No Action Alternative would have no direct, indirect, or cumulative impacts on topography.

Proposed Action Alternative

Direct Impacts

The Proposed Action Alternative would require grading to reshape existing terrain, reduce slopes, raise and lower existing ground elevations, install culverts, and backfill areas that require excavation, or other similar activities that would be necessary for construction of the project. Fill material from sources located outside of the project area would potentially be required. Consequently, the Proposed Action Alternative would have minor to moderate long-term impacts on topography within the project area.

Indirect Impacts

During construction of the proposed project, surface disturbances would result in removal of vegetation cover and disturbance of the underlying soils. Soil disturbance would increase the potential for erosion and soil loss, ultimately affecting the topography of the area. Best management practices and environmental protection measures would be implemented to control erosion. Therefore, the indirect impacts of the Proposed Action Alternative would be adverse, short-term impacts that are negligible and localized.

Cumulative Impacts

The minor to moderate direct impacts and negligible temporary, short-term impacts associated with the Proposed Action Alternative would contribute incrementally to the effects on topography from past construction of Interstate 80 and State Routes 427 and 447. These roads were constructed on roadway grades that are several feet higher than the areas adjacent to them. The proposed road would be constructed on a similar roadway grade higher than surrounding areas. While the raised roadway grade would add new topographic features to the cumulative effects analysis area, the new features would not be topographically different from the roadway grades of previously constructed roads. No present or reasonably foreseeable future actions would affect topography. Therefore, when considering the size of the project with other past actions, the Proposed Action Alternative would result in only a minimal contribution to cumulative impacts on topography.

(b) Soils

No Action Alternative

The No Action Alternative would not require ground disturbance in the project area. No direct, indirect, or cumulative impacts on soils would result from the No Action Alternative.

Proposed Action Alternative

Direct Impacts

Implementation of the Proposed Action Alternative would adversely affect soils with minor short-term and permanent impacts. Permanent impacts on soils would result from native soils being buried beneath the proposed road and roadway embankments. Permanent impacts would affect approximately 43.6 acres of soils within the project area. The effects of permanent soil impacts would be minor because the affected soils are abundant beyond the project area and would not be affected (Figure 5). Temporary impacts on soils would occur where construction-related surface disturbance affects native soils in the project area. Temporary construction disturbance would be reclaimed after construction is completed and would be short-term. Potential effects on soils during construction would include compaction where equipment repeatedly travels, scraping of soil surface layers for staging purposes, and temporary burial

beneath soil stockpiles and construction materials. Temporary impacts could affect soils anywhere in the project area except for areas where permanent impacts would occur. Accordingly, a maximum of approximately 41.7 acres of soils would be temporarily impacted during construction. Short-term impacts on soils would be adverse and considered minor due to the same reasons permanent impacts would be considered minor.

Indirect Impacts

Potential indirect impacts on soils resulting from construction of the Proposed Action Alternative would be related to soil disturbance and sedimentation from construction activities during construction and after construction has been completed. Environmental protection measures listed in Section 6.1 would minimize soil erosion during construction and after construction. These measures include development and implementation of a Storm Water Pollution Prevention Plan (SWPPP) specifying site specific best management practices (i.e., temporary and permanent erosion and sediment controls) that will be used. Although erosion-control measures and reseeding would be implemented according to standard practice, some erosion might occur from rain and wind until these disturbed areas develop an erosion-resistant crust or vegetation begins to grow. The impact would be noticeable in the short term after construction but would diminish with time. Therefore, the indirect impacts on soils resulting from the Proposed Action Alternative would be minor and short-term.

Cumulative Impacts

The minor direct impacts associated with construction of the Proposed Action Alternative would contribute to the past effects on soils that resulted from the construction of existing roads and structures and from past agricultural activities. Continued agricultural activities over time would be expected to result in disturbance to the same soils currently under cultivation, but no new soil disturbance would be anticipated to result.

The magnitude of human-caused erosion due to the proposed project would be negligible considering the magnitude of natural erosion occurring in the Truckee River watershed. Therefore, when considering the size of the project and other past, present, and reasonably foreseeable future actions, the Proposed Action Alternative would result in a negligible contribution to cumulative impacts on soils.

(c) Geologic Setting and Mineral and Paleontological Resources

The Proposed Action Alternative and No Action Alternative would not alter or affect the existing geologic setting. Neither alternative would degrade mineral resources. Paleontological resources are unlikely to be present. Therefore, neither the Proposed Action Alternative nor the No Action Alternative would have any direct, indirect, or cumulative impacts on geologic setting or on mineral and paleontological resources.

4.2 WATER RESOURCES

No Action Alternative

The No Action Alternative would not require impacts on WOUS, ground disturbance, or use of groundwater. There are no 100-year floodplains within the project area. The No Action Alternative would have no direct, indirect, or cumulative impacts on water resources.

Proposed Action Alternative

Direct Impacts

Under the Proposed Action Alternative, water would be required during construction for dust suppression, cleaning, and soil manipulation. Construction water would be obtained from nearby wells and/or irrigation drains. Alternatively, water could be delivered to the project area from sources located outside of the Reservation. Acquisition of construction water would be the responsibility of the contractor(s). The contractor(s) would adhere to all applicable tribal, state, and federal regulations when obtaining construction water. The quantity of water used for construction purposes would be minimal compared with quantities withdrawn from the groundwater table for agricultural, residential, and commercial use. Groundwater resources would not be impacted by the Proposed Action Alternative.

The Garavanta Ditch located approximately 550 feet north of State Route 427 is considered a WOUS and would be perpendicularly crossed by the proposed bypass road. A culvert crossing would be constructed within the irrigation ditch where it would be intersected by the proposed bypass road. Approximately 110 linear feet of the irrigation ditch would be affected by construction and installation of the culvert crossing. The irrigation ditch is approximately 6 feet wide along its entire length, including where the culvert crossing would be constructed. Therefore, approximately 660 square-feet (0.02 acre) of WOUS would be impacted by the proposed project.

The culvert crossing would be designed and constructed so that the functionality of the Garavanta Ditch is maintained and the existing hydraulic flow patterns of the irrigation ditch are unaltered. Because flows can be controlled and manipulated in the irrigation ditch, no dewatering would be required during construction of the crossing. The perpendicular configuration of the crossing would minimize the length of ditch that is impacted. Best management practices would be implemented during construction that would prevent sedimentation and erosion of the irrigation ditch. Degradation of water quality of the irrigation ditch would not be expected to result from the proposed project.

The construction of the culvert crossing would meet the conditions of a Clean Water Act Section 404 Nationwide Permit 14 for linear transportation projects administered by the USACE.

Because the total impacts to WOUS associated with the proposed project would be less than 0.1 acre and the impact would not occur within a wetland, submittal of a preconstruction notification to the USACE District Engineer would not be required. The proposed project would be constructed and operated in accordance with the general and special conditions of the Nationwide Permit.

The proposed project would have a negligible and localized impact on WOUS with implementation of best management practices during construction and conformance with the conditions and terms of the Nationwide Permit 14. There are no other WOUS or other wetland areas within the project area.

There are no 100-year floodplains within the project area. No direct, indirect, or cumulative impacts on floodplains would result from the Proposed Action Alternative.

Indirect Impacts

Potential indirect impacts on water resources resulting from construction of the Proposed Action Alternative would be related to the potential for increased turbidity of surface waters located down-gradient and outside of the project area boundaries. Potential increased turbidity would be due to erosion from disturbed areas after construction of the project has been completed. Although erosion-control measures and reclamation would be implemented, some erosion might occur from storm events. This potential impact would persist until the disturbed areas develop an erosion-resistant crust or reclamation vegetation begins to grow. The impact would be negligible and would diminish over time. The indirect impacts on water resources resulting from the Proposed Action Alternative would be negligible and short-term.

Cumulative Impacts

The Proposed Action Alternative would not have any direct impacts on surface water. Indirect impacts would be negligible and short-term and would not contribute to cumulative impacts on water resources. Therefore, the Proposed Action Alternative would not have any cumulative impacts on water resources.

4.3 AIR QUALITY

No Action Alternative

The existing air quality within the Wadsworth area and the Tracy Hydrographic Area would not be improved or degraded as a result of the No Action Alternative. The current vehicle mix, traffic volume, or any other factor that would affect current emissions of air pollutants would be altered by this alternative. Therefore, the No Action Alternative would have no direct, indirect, or cumulative impacts on air quality.

Proposed Action Alternative

Direct Impacts

The Proposed Action Alternative would contribute emissions during construction that would result in negligible, short-term deterioration of air quality. The operation of construction equipment would produce combustion emissions, and travel on exposed soils would generate fugitive dust emissions. Demolition of existing road surfaces where intersections would occur with the new road would produce short-term fugitive dust emissions. Earth-moving and grading activities would shift and loosen soils, causing fugitive dust emissions. All tribal and federal dust abatement measures would be adhered to during construction activities. Water would be sprayed on disturbed surfaces within the project area to suppress dust emissions. The amount of any dust emissions generated during construction would be substantially less than what is generated from adjacent agricultural fields and unpaved roads near and crossing the project area.

The total approximate emissions of criteria pollutants that would be expected to result from the construction of the proposed project are provided in Table 12. The total tons of each pollutant listed in Table 12 are based on the operation of the equipment listed in Table 6, and the fugitive dust emissions associated with operating equipment on exposed soils.

Table 12 Estimated Construction Emissions of Criteria Pollutants

	Criteria Pollutant (tons)				
	PM_{10}	$PM_{2.5}$	SO_2	NO_X	CO
Total Emissions for Life of Project*	9.03	3.12	0.75	11.46	5.42

*Assumes a 120-day construction period. Total emissions may vary depending on the actual number of days required for construction and the actual equipment used during construction.

The deterioration of air quality from the estimated emissions provided in Table 12 would generally be localized to Wadsworth area. Additionally, the estimated emissions listed above in Table 12 are the total emissions anticipated for the entire construction process; as such, impacts resulting from them would be short-term for the approximately 6-month construction period.

Combustion emissions would not be anticipated to increase above existing levels once the proposed project is constructed. The proposed road is expected to receive the existing traffic that currently travels on State Route 447 through Wadsworth and, therefore, increases in traffic volume or alteration of the vehicle mix is not anticipated. The distance between State Route 447 in Wadsworth and project area is approximately 3,200 feet. Relocating the traffic volume over such a distance would not be great enough to result in any measureable reduction of combustive emissions within Wadsworth, or measurable increases within the project area. Therefore, the only direct impacts on air quality that would occur as a result of the Proposed Action would be negligible, short-term impacts during construction.

The "transportation conformity" rule was issued in 1993 by the U.S. Environmental Protection Agency, with the concurrence of the U.S. Department of Transportation. The rule mandates that transportation investments in nonattainment and maintenance areas are consistent with the state commitments to meet national air pollution standards. The Tracy Hydrographic Area is not a nonattainment or maintenance area for any criteria pollutant. The estimated emissions resulting from the Proposed Action Alternative would not exceed the NAAQS for any of the criteria pollutants, and Tracy Hydrographic Area would not be reclassified as a nonattainment or maintenance area as a result. Accordingly the "transportation conformity" rule of 1993 does not apply to the proposed project. The Proposed Action Alternative complies with Section 176(c) of the Clean Air Act as amended (42 USC 7521(a)).

Prevention of Significant Deterioration

According to Section 302 of the Clean Air Act, the proposed project does not meet the criteria of a new major stationary source of air pollution or a modification to an existing major stationary source. The proposed project is also not an emission source which may potentially emit 100 tons per year or more of any pollutant subject to regulation under the Clean Air Act, as demonstrated in Table 12. As such, the Prevention of Significant Deterioration program does not apply to the Proposed Action Alternative.

Indirect Impacts

No potential indirect impacts on air quality resulting from the Proposed Action Alternative would be expected.

Cumulative Impacts

The Proposed Action Alternative would not increase traffic volume or vehicle mix in the cumulative effects analysis area. The negligible, short-term impacts resulting from emissions during the anticipated 120-day construction period of the project would not have detectable cumulative impacts on air quality. According to the Comprehensive Resource Management Plan for the Reservation, a large part of the cumulative effects analysis area is planned for future residential, commercial, and industrial development. Applications and design plans have not been submitted for specific projects associated with this planned growth, and therefore, would presumably occur outside of and after the temporal boundary of the cumulative effects analysis. There are no other reasonably foreseeable future projects that would occur during the construction of the proposed project, which is when any air quality impacts associated with it would occur. Therefore, the Proposed Action Alternative would have no cumulative impacts on air quality.

4.4 LIVING RESOURCES

(a) Ecosystems and Biological Communities

No Action Alternative

The No Action Alternative would not result in impacts on wildlife habitat or vegetation in the project area. Therefore, the No Action Alternative would have no direct, indirect, or cumulative impacts on ecosystems and biological communities.

Proposed Action Alternative

Direct Impacts

The Proposed Action Alternative would result in long-term and permanent removal of non-native and native vegetation within the project area. Approximately 10.6 acres of non-native and native vegetation would be permanently removed from the project area. Permanent removal of vegetation would occur where the proposed road and roadway grade are constructed. Short-term removal of vegetation would occur in areas where construction-related surface disturbances are required to construct the project. Temporary, short-term construction disturbances would be reclaimed. Reclamation would include seeding disturbed areas to restore vegetation cover. Several years would be required before reclaimed vegetation resembled surrounding vegetation unaffected by the project. The impact of vegetation removal on the overall ecosystem would not be detectable. There would be no change in species composition as a result of the project, and the ecosystem would not be altered or otherwise impacted as a functioning biological community. Therefore, the Proposed Action Alternative would have no direct impact on ecosystems and biological communities.

Indirect Impacts

No potential indirect impacts on ecosystems and biological communities resulting from the Proposed Action Alternative would be expected.

Cumulative Impacts

Construction and development of Wadsworth and related infrastructure have removed, converted and degraded areas of natural vegetation cover in the project vicinity. Agricultural activities that have also removed, converted, and degraded natural vegetation cover in areas south of the project area. The Proposed Action Alternative would permanently impact 10.6 acres of vegetation within the project area but would not impact or otherwise alter the overall ecosystem. When considered with past, present, and reasonably foreseeable future actions, the Proposed Action Alternative would result in a negligible cumulative impact on ecosystems and biological communities.

(b) Vegetation

No Action Alternative

Under the No Action Alternative, disturbance to vegetation would not occur. Consequently, the No Action Alternative would have no direct, indirect, or cumulative impacts on vegetation.

Proposed Action Alternative

Direct Impacts

Approximately 10.6 acres of vegetation would be permanently lost as a result of the Proposed Action Alternative. These losses would occur in areas where the proposed bypass road and realigned segment of Olinghouse Road would bury vegetation substrate, thereby eliminating any potential medium for vegetation growth. Approximately 10.3 acres of the permanent vegetation impacts would occur within the mixed salt desert scrub community. The other 0.3 acre of vegetation that would be permanently lost would occur to the vegetation community dominated by mature-aged Fremont cottonwood trees and to vegetation growing in the agricultural field in the southernmost portion of the project area. The affected vegetation communities are present on land surrounding the project area. Mixed salt desert scrub cover, in particular, is extensive and widespread across much of the Reservation. Therefore, the impact of approximately 10.6 acres of permanent vegetation removal would be minor.

Approximately 71.5 acres of additional impacts on vegetation would potentially occur during construction of the project. Construction activities, such as maneuvering equipment, stockpiling materials, or constructing best management practices to control erosion, would result in removal or mortality of existing vegetation cover. Areas disturbed during construction that would not become occupied by the proposed roadway surface would be reclaimed following construction. Reclamation would include applying a native seed mix to disturbed surfaces that would naturally restore vegetation cover. Construction-related effects to vegetation would have a minor, short-term adverse impact.

Indirect Impacts

Potential indirect impacts on vegetation resulting from construction of the Proposed Action Alternative would be related to the potential for establishment of weeds and the potential for erosion. The potential for soil erosion is addressed in Section 4.1(b). Environmental protection measures listed in Section 6.1 addresses the potential for weed establishment and requires that a Noxious Weed Management Plan shall be developed and implemented to control noxious weeds in and around areas disturbed from construction activities. The impact would be negligible and would diminish over time. The indirect impacts on vegetation resulting from the Proposed Action Alternative would be negligible and short-term.

Cumulative Impacts

Construction and development of Wadsworth and related infrastructure have converted and degraded areas of natural vegetation cover in the project vicinity. Irrigation systems sustain agricultural activities that have also converted and degraded natural vegetation cover in areas south of the project area. Most of the vegetation cover affected by these actions was mixed salt desert scrub cover. The Proposed Action would permanently remove approximately 10.6 acres of additional vegetation from within the cumulative effects assessment area, including approximately 10.3 acres of mixed salt desert scrub vegetation. Considering the abundance of similar vegetation within the cumulative effects analysis area, the minor permanent impact to vegetation associated with the Proposed Action Alternative would result in a negligible cumulative impact to vegetation.

(c) Wildlife

General Wildlife

No Action Alternative

The No Action Alternative would not result in any direct, indirect, or cumulative impacts on general wildlife.

Proposed Action Alternative

Direct Impacts

The Proposed Action Alternative would cause temporary and permanent losses of wildlife habitat, but would have less detectable effects to wildlife populations. Long-term impacts would result from the permanent loss of approximately 10.6 acres of wildlife habitat within the project area. Most of the affected habitat would be mixed salt desert scrub, which is abundant in surrounding and adjacent areas. The loss of approximately 10.6 acres would not be anticipated to have any permanent measureable change in the population level of any wildlife species. Since wildlife habitat would be permanently lost, impacts would be long-term but negligible.

Most of the direct impacts on wildlife would be minor, short-term adverse impacts that occur during construction. Project construction activities would have a short-term, temporary impact on approximately 71.5 acres of additional wildlife habitat within the project area because habitat would be revegetated following construction. Other potential short-term impacts would include injury or death of small reptiles and small burrowing mammals that cannot escape during ground-disturbing activities and temporary displacement of wildlife resulting from equipment noise and human presence.

Indirect Impacts

The Proposed Action Alternative would result in new traffic patterns that shift through-traffic that would normally travel State Route 447 through Wadsworth to the proposed bypass road.

Because the proposed road would be aligned to avoid residential and commercial areas in Wadsworth, higher travel speeds would permissible and/or possible than those currently attained on State Route 447 through Wadsworth. Higher vehicle speeds would increase the potential for wildlife to be injured or killed in collisions with vehicles. Dead birds and animals resulting from recurring collisions may attract scavenger species, which would further increase the potential for wildlife and vehicle collisions. Considering the abundance of similar habitat in the area, species that would potentially be struck by vehicles would be found elsewhere in the area. Mortality from potential collisions would be a permanent impact but would have no impact on wildlife species at a population level.

Cumulative Impacts

Agricultural activities and construction and development in Wadsworth and associated infrastructure, including noise and human presence supported by infrastructure, have removed, converted, and degraded areas of natural vegetation (wildlife habitat) in the project vicinity. The Proposed Action Alternative would permanently impact a very small area (approximately 10.3 acres) relative to the area of similar unaffected habitat in the cumulative effects analysis area. The majority of the project-related impacts would be temporary and short-term in nature. Therefore, when considered with past, present, and reasonably foreseeable future actions, the Proposed Action Alternative would result in a negligible cumulative impact on wildlife.

Threatened, Endangered, and Sensitive Species

No Action Alternative

There are no records of federally listed species, or species proposed or candidates for federal listing, within the project area. The USFWS listed species for Washoe County list does not contain any species that would be supported by habitat present in the project area. Bald eagle, a tribally sensitive species that is protected by various federal and state laws, may winter in the area. However, the No Action Alternative would not result in alteration of current conditions. Therefore, the No Action Alternative would have no direct, indirect, or cumulative impacts on federally listed threatened or endangered species or on any species identified as sensitive by the Pyramid Lake Paiute Tribe.

Proposed Action Alternative

Direct Impacts

There are no records of federally listed species, or species proposed or candidates for federal listing, within the project area. Habitat within the project area would not support any federally listed species on the list prepared for project area by the USFWS (see Table 9). The project would not have an impact on threatened or endangered species (Appendix E). There are also no reported occurrences of tribally sensitive species within the project area. Habitat supporting tribally sensitive species reported to occur on the Reservation is not found in the project area.

It is possible that the project area is part of a larger foraging habitat for golden eagle. Golden eagles may nest in the Pah Rah Range, Truckee Range, and Black Mountains, all of which are located approximately 5 miles from the project area. Golden eagle may winter along the Truckee River, which is located on the east side of Wadsworth, approximately 4,000 feet or more west of the project area. The proposed project would result in the permanent removal of approximately 10.6 acres of golden eagle foraging habitat. Temporary impacts to foraging habitat within the road embankment area would total 31.4 acres. The remaining 40.1 acres of potential golden eagle foraging habitat within the project area that occurs outside of the proposed embankments and road may also be disturbed, for a total disturbance of approximately 82.1 acres. The removal of approximately 82.1 acres of golden eagle foraging habitat would be negligible when the abundance of similar habitat that occurs in the region is considered. No "take" (i.e., mortality) of eagles would result from permanent or temporary removal of habitat.

The Proposed Action Alternative would not be expected to impact nesting golden eagles in mountain ranges surrounding the project area, or bald eagles potentially wintering along the Truckee River. According to the Washington Department of Fish and Wildlife (2003), numerous studies suggest a 300-meter (approximately 984-foot) buffer would prevent flushing of approximately 90 percent of eagles. The studies further suggest that the establishment of buffer zones that surround nests is generally an accepted technique to reduce disturbance to nesting eagles if the buffer is of sufficient width to capture 90 percent to 95 percent of flushing distances. The proposed project is located approximately 5 miles from the nearest potential nesting habitat for golden eagles and several thousand feet from the Truckee River– distances well in excess of the 90 percent to 95 percent flushing distance buffer.

Empirical evidence that has been examined in most golden eagles studies suggest that golden eagle nesting activity is unaffected by most human activities that occur at distances beyond approximately 0.5 mile (Washington Department of Fish and Wildlife 2003). However, individual eagles or eagle pairs may demonstrate differing sensitivity to disturbance, particularly those located in areas where habitat quality is marginal due to low density of prey species (Grubb, Delaney & Bowerman 2007), or remote areas where human activity is limited or encountered only rarely (USFWS 1999). A specific golden eagle population associated with cliff habitat on the Hopi Indian Reservation in Arizona is discussed in a Biological Evaluation prepared for a proposed bridge replacement project (Bureau of Indian Affairs, Western Regional Office 2010). Anecdotal evidence suggested that this golden eagle population had a lower tolerance to human disturbance and would be affected by activities more than 0.5 mile away. A buffer zone of 2 miles surrounding nests was determined to be of adequate width to protect the eagle population from impacts associated with construction of the project during the breeding season.

The proposed project is located approximately 5 miles from the nearest potential nesting habitat for golden eagles. It is unknown whether golden eagles would be less tolerant of human disturbance than typical and thus be impacted by activities greater than 0.5 mile of their nesting sites. However, the 5-mile distance between the project area and nearest potential nesting habitat is well in excess of the 2-mile buffer that was established to protect the eagle population on the Hopi Reservation that was believed to have a low tolerance to human disturbance. Accordingly, the Proposed Action Alternative would not be expected to impact nesting golden eagles.

Impacts to bald eagles potentially wintering along the Truckee River would also not be expected to result from the Proposed Action Alternative. At its southernmost end, the project area is separated from the Truckee River by Interstate 80 and several thousand feet of agricultural fields. Some attenuation of the noise generated by the proposed project would occur as the sound waves moved through the several thousands of feet between the project area and river. Noise generated by traffic on Interstate 80 would be expected to be louder than most noise generated by the project, especially when attenuation is considered. The northern and central portions of the project area are separated from the Truckee River by Wadsworth and approximately 3,200 feet of relatively undeveloped land vegetated with shrubs and grasses. Noise generated by the project would be attenuated as sound waves must first move through the approximately 3,200-foot distance before reaching Wadsworth and the Truckee River. Structures and development in Wadsworth would dampen any project construction noise that was not attenuated, and at times, traffic and activities in Wadsworth would produce louder noise than construction activities.

Indirect Impacts

The Proposed Action Alternative would have no indirect impacts on threatened or endangered species or on tribally sensitive species.

Cumulative Impacts

The Proposed Action Alternative would have no cumulative impact on threatened or endangered species or tribally sensitive species.

Migratory Birds

No Action Alternative

The No Action Alternative would not have any direct, indirect, or cumulative impacts on migratory birds.

Proposed Action Alternative

Although nearly every species of bird in Washoe County is protected by the Migratory Bird Treaty Act, and hundreds of these species could potentially occur in habitat found in the project

area, environmental protection measures listed in Section 6.1 would prevent the Proposed Action Alternative from having direct, indirect, and cumulative impacts on them. These measures include pre-construction nesting surveys during the migratory bird nesting season and avoidance of nests located during the survey.

4.5 CULTURAL RESOURCES

(a) Cultural and Archaeological Resources

No Action Alternative

The No Action Alternative would not result in impacts on archaeological or historical artifacts. No impacts to historic sites listed or potentially eligible for listing on the National Register of Historic Places would occur. Therefore, the No Action Alternative would have no direct, indirect, or cumulative impacts on cultural and archaeological resources.

Proposed Action Alternative

Implementation of the Proposed Action Alternative would result in construction of culvert crossings of segments of two historic irrigation ditches that have been recommended as eligible for nomination to the National Register of Historic Places: Garavanta Ditch (site 26Wa9386) and Wadsworth Light and Power Co. Ditch (site 26Wa9388). The culvert crossings would be designed and constructed so as to maintain the functionality of the irrigation ditches and overall irrigation system, regardless of whether the ditches are actively operated or not.

Because neither of the two historic irrigation ditch segments (26Wa9386 and 26Wa9388) can be avoided by the proposed project, treatment measures were conducted in order to mitigate the effects to these historic sites under Criterion A. Measures included photographic documentation and archival research. It was the recommendation of Kautz Environmental Consultants, Inc. that development and implementation of these measures adequately mitigated the potential effects of the proposed project, and therefore implementation of the Proposed Action Alternative would have no adverse effect to historic properties. In a letter dated April 21, 2014, the Pyramid Lake Paiute Tribe THPO concurred with these recommendations. A copy of the letter from the Pyramid Lake Paiute Tribe THPO is provided in Appendix C.

Any unrecorded archaeological or historical artifacts or remains discovered during construction shall be left intact and undisturbed, all work in the area shall stop immediately, and the THPO and Western Regional Office Archaeologist shall be notified immediately pursuant to 36 CFR 800.13. Commencement of operations shall be allowed upon notification by the BIA Regional Roads Engineer.

Environmental protection measures listed in Section 6.1 require that if during construction operations any human remains, funerary objects, sacred objects or object of cultural patrimony as

defined in the Native American Graves Protection and Repatriation Act (PL 101-601; Statute 3048; 25 USC 3001) are discovered, operations shall stop in the immediate area of discovery and protection of the remains and objects shall be provided. The THPO and Western Regional Office Archaeologist shall be notified immediately of the discovery by telephone with written confirmation to follow. Protection of the immediate area of the discovery shall continue until notification that operations may continue is provided by the Western Office Region Archaeologist through the BIA Regional Roads Engineer.

4.6 SOCIO-ECONOMIC RESOURCES

(a) Employment and Income

No Action Alternative

The No Action Alternative would not provide temporary jobs or income for the tribal community. Therefore, the No Action Alternative would have no direct, indirect, or cumulative impacts on employment or income on the Reservation.

Proposed Action Alternative

Direct Impacts

The Proposed Action Alternative would be expected to generate new employment opportunities during construction of the proposed road. Tribal members may find temporary employment through these new opportunities. Employment opportunities for tribal members would be prescribed and coordinated through the Tribal Employment Rights Office (TERO). The TERO Office(r) generally enforces Native American preference in hiring goals, permits to do business on tribal lands, and collection of TERO taxes. Tribal members registered with TERO would be given hiring preference for “non-core” positions within the contracting companies, such as vehicle operators, construction flaggers, general laborers, and so on.

Members of the road construction crew may purchase food, tobacco, batteries or other light construction materials, and/or gasoline for personal vehicles driven to and from the site from the Interstate 80 Smoke Shop. These types of purchases would have a positive direct impact to the local economic base and income on the Reservation that is short-term and minor for the duration of the project.

There will be no residential or business displacements with the Proposed Action Alternative. However, roadside vendors have historically operated along State Route 447 through Wadsworth, where the speed limit ranges from 25 to 35 miles per hour. To avoid being bypassed by tourist traffic, the roadside vendors would be required to relocate out of Wadsworth, to portions of State Route 447 located north of where it and the bypass road would intersect. The speed limit on this segment of State Route 447 is 55 miles per hour or greater. The higher travel speeds may be less conducive to roadside stops by tourists which would result in reduced

business for roadside vendors. However, areas north of Wadsworth are largely undeveloped and there are very few if any other retailers of any kind in the area. It is likely that tourists would continue to stop at roadside vendors despite the higher travel speeds as many of the vendors would represent the last opportunity to purchase prepared food before reaching most tourist destinations, such as Pyramid Lake or the Burning Man event location. Additionally, vendors would likely relocate to segments of State Route 447 where visibility is greatest and roadside facilities can be spotted with adequate time for safely stopping.

Indirect Impacts

The Pyramid Lake Indian Reservation Comprehensive Resource Management Plan (Pyramid Lake Paiute Tribe and NRCS 2005) indicates that areas adjacent to the project area are planned for commercial and industrial development. This development would create new employment opportunities and increase income on the Reservation. Although many factors can affect whether and how planned development occurs, construction of the Proposed Action Alternative may affect the timing and distribution of the planned development, but not be the cause of it and the amount of land to be developed would not change because of it. Therefore, the Proposed Action Alternative would have a negligible, long-term indirect impact on employment and income that is positive.

Cumulative Impacts

The negligible, short-term direct impacts of the Proposed Action Alternative would not be expected to have any cumulative impacts on employment or income.

(b) Demographic Trends

The No Action and Proposed Action Alternatives would have the same potential effects on demographic composition and trends. The Pyramid Lake Paiute Tribe is a sovereign nation composed almost exclusively of tribal members. No displacement of residents or disproportionate impacts on protected populations would occur as part of either alternative. The entire population of Wadsworth would be equally affected by either the No Action or the Proposed Action Alternatives. Therefore, there would be no direct, indirect, or cumulative impact on demographic composition and trends from the No Action or Proposed Action Alternatives.

(c) Environmental Justice

No Action Alternative

The No Action Alternative would not have any adverse or positive impacts on any minority or low income populations. Direct, indirect, and cumulative impacts on environmental justice would not result from implementation of the No Action Alternative.

Proposed Action Alternative

Direct Impacts

The population of Wadsworth and the Reservation is stable and identified by the Environmental Protection Agency as a minority and low-income population. The Proposed Action Alternative would not directly change the population or growth trends of the area. The proposed project would impose no barriers to social interaction or community functions and would not bisect or isolate any neighborhoods or group of people. No adverse direct impact to minority or low income populations would occur.

Traffic movement through Wadsworth and between Interstate 80 and locations north of Wadsworth would improve after construction is complete and the proposed road is open to motorists. School zones and residential areas in Wadsworth would be relieved of the potential hazards that are currently present from through-traffic travel on State Route 447. Severe traffic congestion associated with the Burning Man Festival would be moved away from State Route 447 and Wadsworth and redistributed onto the proposed road. Therefore, the Proposed Action Alternative would have a major permanent beneficial direct impact on environmental justice.

Indirect Impacts

Indirect, adverse impacts on environmental justice resulting from the Proposed Action Alternative would be avoided by implementation of best management practices and environmental protection measures during construction. These measures would prevent soil erosion, air emissions, hazardous material spills, or other potential impacts that would result in degradation of air and water quality within Wadsworth.

Cumulative Impacts

Implementation of the Proposed Action Alternative would not result in cumulative impacts on environmental justice.

(d) Indian Trust Assets

The proposed project would physically affect Reservation lands in the immediate project area with negligible to moderate impacts on topography, soils, vegetation, and wildlife. Indian Trust Assets, including all treaty rights, water rights, hunting and fishing rights, mineral rights, and so on, would not be impacted from implementation of the proposed project. Therefore, there would be no direct, indirect, or cumulative impacts on Indian Trust Assets from the No Action or Proposed Action Alternatives.

(e) Lifestyle and Cultural Values

The Proposed Action Alternative would permanently remove approximately 10.6 acres of vegetation and temporarily remove up to approximately 71.5 additional acres of vegetation

during construction. The removed vegetation would include Indian ricegrass, Mormon tea, yellow beeplant, Woods' rose, and several isolated, individual sagebrush plants. These species are identified by the Pyramid Lake Paiute Tribe as species some tribe members gather for traditional food and medicinal purposes. These species were observed in areas adjacent to the project area. These species, particularly Indian ricegrass, Mormon tea, Woods' rose, and sagebrush, are also common throughout much of northern Nevada and the Great Basin. The removal of individual plants from the project area would not be detectable during gathering activities on the Reservation. There are no other natural features or unique resources within the project area that hold a cultural value to the Pyramid Lake Paiute Tribe. Therefore, the direct impacts of the Proposed Action Alternative would be negligible and localized to the project area. The Proposed Action Alternative and No Action Alternative would not have indirect or cumulative impacts on lifestyle and cultural values.

(f) Community Infrastructure

No Action Alternative

The No Action Alternative would not require the relocation of power poles or the temporary bridging of irrigation canals. Therefore, the No Action Alternative would have no direct, indirect, or cumulative impacts on community infrastructure.

Proposed Action Alternative

Direct Impacts

The proposed bypass road would be travelled by vehicles that currently travel on State Route 447 through Wadsworth. This includes near-daily passenger-sized vehicles, large tractor-trailers and dump trucks, and other heavy trucks associated with mining operations north of Wadsworth. Traffic related to the Burning Man festival that currently travels State Route 447 each year would be redirected to the proposed road. The proposed road would cross beneath overhead transmission lines in four locations within the proposed right-of-way. The height of the transmission lines above the ground surface would be increased so as to provide adequate clearance for large trucks or decorated vehicles. Existing power poles associated with the transmission lines would be moved where they occur within the proposed road grade and alignment. Consultation with owners of the various utility lines would occur during the final design and construction phases of the Proposed Action Alternative to ensure uninterrupted services.

The proposed road would intersect the existing Garavanta Ditch, which is a historic irrigation ditch that is still operated and crosses the project area approximately 550 feet north of State Route 427 (Figure 3). At the crossing, approximately 100 feet of the irrigation ditch would be piped through a culvert under the proposed road. The culvert would permit the ditch to continue to function and convey water for irrigation following construction of the project. Because flows

can be controlled and manipulated in the irrigation ditch, no dewatering would be required during construction of the crossing. Construction of the culvert crossing would require 1 to 2 weeks and would require irrigation flows, if present, to be halted during this time. A second, ditch (i.e., Wadsworth Light & Power Co. Ditch) located approximately 1,150 feet north of the Garavanta Ditch would also be crossed (Figure3). However, this ditch is no longer used or operated.

The direct impacts that the Proposed Action would have on community infrastructure would be negligible or not detectable and would be short-term for the duration of the construction of the culvert crossing.

Indirect Impacts

No indirect impacts on community infrastructure have been identified as potentially resulting from implementation of the Proposed Action Alternative.

Cumulative Impacts

The Proposed Action Alternative would not have any cumulative impacts on community infrastructure.

4.7 RESOURCE USE PATTERNS

(a) Hunting, Fishing, and Gathering

No Action Alternative

The No Action Alternative would not result in any activities that would impact, alter, or otherwise influence hunting, fishing, or gathering. There would be direct, indirect, or cumulative impacts on hunting, fishing, or gathering as result of the No Action Alternative.

Proposed Action Alternative

Direct Impacts

The project area does not provide safe or ideal hunting conditions and is not an area that would be utilized by hunters. Implementation of the Proposed Action Alternative would not have any impact on hunting activities.

The Proposed Action Alternative would not have any direct impacts on the Truckee River or Pyramid Lake fisheries. There are no streams, rivers, lakes, or other waters in the project area. Fishing opportunities do not exist within the project area. Therefore, there would be no direct impacts on fishing as a result of the Proposed Action Alternative.

The Proposed Action Alternative would remove several species of vegetation that the Pyramid Lake Paiute Tribe identifies as being gathered by some of its members for food and medicinal

purposes. These species include Indian ricegrass, Mormon tea, sagebrush, Woods' rose, and yellow beeplant. These species, particularly Indian ricegrass, Mormon tea, and sagebrush, are common throughout much of northern Nevada. All of the affected species were observed in areas immediately adjacent to the project area. The permanent removal of approximately 10.6 acres of vegetation cover that would result from the Proposed Action would not have a detectable effect on the availability of these species for gathering within the Reservation. Therefore, the Proposed Action Alternative would have a negligible, adverse direct impact that is localized to the areas that would be beneath the proposed road surface.

Indirect Impacts

Indirect impacts of the Proposed Action Alternative would be avoided by implementing best management practices for erosion control and accidental spills during construction. This would protect the Truckee River and its tributaries from any potential degradation from surface water runoff or spills from within the project area following a storm event. Therefore, indirect impacts on fishing would not result from the Proposed Action Alternative.

Cumulative Impacts

With no direct or indirect impacts on hunting, fishing, and gathering, the Proposed Action would not have any cumulative impacts either.

(b) Timber Harvesting

There are no commercial timber-harvesting operations on the Reservation. The project area does not contain forest or any areas managed for timber production. Therefore there would be no direct, indirect, or cumulative impacts on timber-harvesting activities from the No Action Alternative or the Proposed Action Alternative.

(c) Agriculture

No Action Alternative

The No Action Alternative would not impact or otherwise influence agricultural activities in the project area; therefore, the No Action Alternative would have no direct, indirect, or cumulative impacts on agriculture.

Proposed Action Alternative

Direct Impacts

Implementation of the Proposed Action Alternative would result in approximately 1.75 acres of disturbance within the approximately 42-acre agricultural field adjacent to the north side of State Route 427 (Figure 2). Approximately 0.2 acres of the disturbance would be permanent and occur where crops could no longer be cultivated, generally beneath the proposed road surface and shoulders. The remaining 1.55 acres of the total disturbance would consist of short-term

construction-related surface disturbance. Areas where short-term impacts occur would be restored to pre-construction conditions during reclamation and would resume functioning as agricultural field. The permanent removal of approximately 0.2 acres of agricultural field would be minor because it represents only approximately 0.7 percent of the agricultural field. Therefore, the Proposed Action would have minor short-term and long-term adverse impacts on agriculture.

Farmland Protection Policy Act

The NRCS uses a Land Evaluation and Site Assessment system to establish a farmland conversion impact rating score on proposed sites of projects that are federally funded or assisted. The assessment is completed on form AD-1006, Farmland Conversion Impact. The farmland conversion impact rating score is used as an indicator for the project sponsor to consider alternative sites if the potential adverse impacts on the farmland exceed the recommended allowable level.

The Proposed Action Alternative would directly and irreversibly convert approximately 3.2 acres of farmland subject to the provisions of the FPPA to nonagricultural uses (i.e., proposed road and associated right-of-way). The total farmland conversion impact rating score for the 3.2 acres of impacts, as determined by the NRCS, is 137 points out of a possible 260 points. Per 7 CFR 658.4(c)(2), "sites receiving a total score of less than 160 need not be given further consideration for protection and no additional sites need to be evaluated." A copy of the form AD-1006 that NRCS completed for the proposed project, which includes the total point determination, is provided in Appendix D.

Indirect Impacts

No indirect impacts on agriculture would be anticipated to occur as a result of the Proposed Action Alternative.

Cumulative Impacts

There are no other past, present, or reasonably foreseeable future actions that are known to have impacted agricultural areas within the cumulative effects analysis area. The minor short- and long-term impacts resulting from the Proposed Action Alternative would have a negligible and localized cumulative impact on agriculture.

(d) Mining

There are no active or abandoned mining operations within the project area. Therefore, there would be no direct, indirect, or cumulative impacts on mining activities from the No Action Alternative or the Proposed Action Alternative.

(e) Recreation

No community parks, sporting facilities, or other designated recreational amenities are within the project area. Therefore, there would be no direct, indirect, or cumulative impacts on recreation from the No Action Alternative or the Proposed Action Alternative.

(f) Transportation Networks

No Action Alternative

Direct Impacts

The No Action Alternative would not have any effects on existing traffic patterns, mix, or volume on any road or area. No direct, indirect, or cumulative impacts would occur as a result of this alternative.

Indirect Impacts

Selection of the No Action Alternative would not result in construction of a road that bypasses the Wadsworth community or any other road. Through-traffic would continue to use the segment of State Route 447 through Wadsworth to access Pyramid Lake or other locations north of Wadsworth. Traffic would continue to travel through residential and school zones in Wadsworth, and the potential hazards associated with traffic in these areas would not be relieved. Severe temporary traffic congestion in Wadsworth associated with the annual Burning Man event held north of the Reservation would persevere. Therefore, the No Action Alternative would perpetuate the moderate negative indirect effects that the current use of State Route 447 by through-traffic has on transportation networks on the Reservation.

Cumulative Impacts

The No Action Alternative would have no cumulative impacts on transportation networks within the Reservation.

Proposed Action Alternative

Direct Impacts

State Route 447 would remain open to traffic for the duration of the project. The proposed road would intersect State Route 447, State Route 427, and Olinghouse Road. Minor inconveniences to motorists would result from construction of the intersections due to traffic delays and slower speeds implemented temporarily during construction for the safety of the road crew. Therefore, negative direct impacts on transportation networks that are minor and temporary would result from the Proposed Action Alternative.

The Proposed Action Alternative would improve traffic movement through Wadsworth and between Interstate 80 and locations north of Wadsworth after construction is complete and the proposed road is open to motorists. Potential traffic hazards associated with through-traffic use

of State Route 447 through Wadsworth near schools and residences would be alleviated once the proposed road is open to traffic. Severe traffic congestion associated with the Burning Man Festival would continue to occur after construction of the project is complete because the number of persons in attendance would not be affected. However, the traffic congestion would no longer be concentrated in the community of Wadsworth but rather on the proposed bypass road where no schools, businesses, or residences are located. Therefore, the Proposed Action Alternative would have a major permanent beneficial direct impact on transportation networks.

Indirect Impacts

Construction of the Proposed Action Alternative could result in some non-tribal member traffic, especially Pyramid Lake traffic, to use State Route 445 rather than State Route 447 in order to avoid temporary construction delays or minor inconveniences that could be encountered. This could cause a negligible to minor increase in average daily traffic on State Route 445 and decrease traffic on State Route 447. Therefore, the Proposed Action Alternative could have a negligible to minor indirect impact on transportation.

Cumulative Impacts

The Proposed Action Alternative would not increase traffic volumes or alter the existing traffic mix within the cumulative effects analysis area. The temporary delays and inconveniences that would occur during construction would not have a cumulative impact on transportation. Therefore, no cumulative impacts would result from the Proposed Action Alternative.

(g) Land Use Plans

No Action Alternative

Although it would not provide the north-south-aligned road west of Wadsworth as shown in numerous land use plans, it would not preclude construction of such a road at some other time in the future. Therefore, the No Action Alternative would have no direct, indirect, or cumulative impacts on land use plans.

Proposed Action Alternative

Direct Impacts

The project area and proposed road are further west of Wadsworth than the alignment shown in the Transportation Plan (Ayala & Associates 2004). The Transportation Plan was prepared with the purpose of identifying the general areas where roads would be needed to promote future development and land uses planned on the Reservation. Road corridors shown in the Transportation Plan were not engineered or designed when the plan was developed and would be subject to refinement that includes minor modifications to the road location.

The proposed bypass road would fulfill the planned north-west transportation corridor between State Routes 427 and 447 west of Wadsworth, despite being slightly west of the corridor shown in plans. This would be conducive to the future industrial and commercial development planned in areas surrounding the project area (Pyramid Lake Paiute Tribe and NRCS 2005). The future development planned in areas surrounding the project area would depend on other factors besides the existence of a north-south-aligned road through the area. Therefore, the Proposed Action Alternative would not initiate or guarantee future development materializes but would only be conducive to the development. Consequently, the Proposed Action Alternative would have positive, but negligible, impacts on land use plans.

Indirect Impacts

As described in direct impacts on land use plans, the Proposed Action Alternative would not be the limiting factor that ultimately determines whether planned industrial and commercial development materializes. The road would be conducive to the planned development but not initiate it. Therefore, the Proposed Action Alternative would have no indirect impacts on land use plans.

Cumulative Impacts

The Proposed Action Alternative would not have any cumulative impacts due to the same reason that there are no indirect impacts on land use plans.

4.8 OTHER VALUES

(a) Wilderness

There are no federally designated wilderness areas or others areas with wilderness characteristics present within the project area. Therefore, the No Action Alternative and the Proposed Action Alternative would have no direct, indirect, or cumulative impacts on wilderness.

(b) Noise and Light

No Action Alternative

The No Action Alternative would not have any direct, indirect, or cumulative impacts on existing ambient noise or light within the project area or near the project area.

Proposed Action Alternative

Direct Impacts

Construction of the proposed project would generate short-term noise from the operation of construction equipment. The FHWA Roadway Construction Noise Model (2011a) was used to estimate the approximate maximum sound level anticipated at each sensitive receptor from construction of the proposed project. The existing ambient sound level and the estimated sound levels anticipated during construction at each receptor site are presented in Table 13.

Table 13 Construction Sound Levels

Receptor Site	Ambient Sound Level	Maximum Sound Level During Project Construction
Natchez Elementary School	53.5 dB	53.5 dB
State Route 427 Residence	47.2 dB	59.6 dB
4th Street Residence	44.5 dB	59.0 dB

As Table 13 shows, construction noise would not affect the existing ambient noise levels at the Natchez Elementary School. This is because noise associated with construction would be expected to attenuate below audible levels over the distance between the project area and school. Sound levels at the residence north of State Route 427 would increase by approximately 12.4 dB when construction noise is loudest. At the residence on 4th Street in Wadsworth, sound levels would increase by approximately 14.5 dB when construction noise is loudest. A similar increase would be expected at neighboring residences. These increases are based on the simultaneous operation of all equipment within the specific portion of the project area closest to each residence receptor site. It is unlikely that all construction equipment would routinely be operated simultaneously. Additionally, construction equipment would progressively move farther from both residential receptor sites as construction of the southern approximately half of the proposed road is completed. Accordingly, the effects of construction noise would be minor. Effects would be short-term for the estimated 6-month construction period and typically occur during daytime hours. Because construction of the project would generally occur during daytime hours, equipment lights would not be expected to have any effects on ambient light levels.

Indirect Impacts

Following construction of the proposed project, much of the through-traffic in Wadsworth would be redirected from State Route 447 onto the proposed road. Vehicle travel on the proposed road would generate traffic noise for the life of the road. The FHWA TNM was used to estimate the approximate Ldn (i.e., day-night average sound level) at the Natchez Elementary School, the residence north of State Route 427, and the residence on the cul-de-sac of 4th Street in Wadsworth. For modeling purposes, the average annual daily trips reported by NDOT (2013) for State Route 447 were used as a surrogate for the proposed road. The existing ambient sound level and the estimated sound levels anticipated from vehicle traffic on the proposed road at each receptor site are presented in Table 14.

Table 14 Post-Construction Traffic Sound Levels

Receptor Site	Ambient Noise Level	Noise Level after Project Construction
Natchez Elementary School	53.5 dB	53.5 dB
State Route 427 Residence	47.2 dB	47.6 dB
4th Street Residence	44.5 dB	45.2 dB

As Table 14 shows, traffic noise from the proposed road would increase ambient noise levels at the residence north of State Route 427 by approximately 0.4 dB. An increase of approximately 0.7 dB would be expected at the residence located on the cul-de-sac of 4th street. Changes in noise levels of less than 1 dB are generally not perceptible to the human ear in normal conditions (Berendt, Corliss, & Ojalvo 2000). Thus, the increased noise levels at each residential receptor site would have negligible to no effects. Effects would increase to negligible only during periods of exceptionally large traffic volumes, such as during holiday weekends or during the annual Burning Man event.

Traffic noise generated from travel on the proposed road would not contribute to the ambient noise levels at the Natchez Elementary School. For modeling purposes traffic noise was calculated assuming that existing average annual daily trips on State Route 447 would continue after the proposed road is constructed and open to traffic. However, it is likely that much of the through-traffic in Wadsworth would be redirected on the proposed road and no longer travel on State Route 447. Accordingly, it is likely that ambient noise levels would decrease in areas of Wadsworth along State Route 447, which include the Natchez Elementary School.

Vehicles travelling on the proposed road during nighttime hours would use headlights. Headlights would introduce new light sources to the project area which is otherwise currently dark. The proposed road would redirect traffic, but is not anticipated to increase existing traffic volume in the region. Therefore the introduction of new light sources to the project area would be balanced by a reduction of lighting from headlights through Wadsworth. Effects would be minor.

Cumulative Impacts

The noise levels after project construction is completed that are presented in Table 14 represent the combined noise from present vehicle traffic and anticipated traffic on the proposed road. There are no other reasonably foreseeable future projects in the cumulative effects analysis area that would be anticipated to affect ambient noise levels. Thus, the indirect effects from traffic noise presented above are effectively the cumulative impacts of the Proposed Action Alternative. As stated above, there would generally be no impact on ambient noise levels. Exceptions would be during periods of exceptionally large traffic volumes, such as during holiday weekends or during the annual Burning Man event when effects would be negligible. However, these negligible effects would be localized at sensitive receptor sites closest to the proposed road. Because the proposed road would not increase traffic volume in the cumulative effects analysis area, overall traffic noise in the area would not increase from implementation of the Proposed Action Alternative. Likewise, the Proposed Action Alternative would not have any cumulative impacts on light.

(c) Visual

No Action Alternative

The No Action Alternative would not directly or indirectly alter the project area or the cumulative effects analysis area. Accordingly, the visual character and appearance would not be affected. There would be no positive or adverse direct, indirect, or cumulative impacts on visual resources from the No Action Alternative.

Proposed Action Alternative

Direct Impacts

The Proposed Action Alternative would result in a permanent visual change in the project area that is substantially different from the existing vegetation cover that dominates its appearance currently. However, there are no visual receptors within the project area. Receptors that would be capable of seeing the entire road at once would be persons hiking or recreating in mountains west and east of the project area. From these locations, receptors would see the proposed road in conjunction with the overall road network in the area, as well as other linear elements such as transmission line corridors. The proposed road would appear visually similar and compatible to the other roads in the area and would not be noticeably contrasting to receptors in the mountains. The first 2,000 to 3,000 feet of the proposed road north of its intersection would be visible to motorists on Interstate 80 near Wadsworth and to motorists on State Route 427 west of Wadsworth to just west of the project area. This would be quite different from the current views of the agricultural field and hillside that this segment of the road would traverse. Motorists travelling south on State Route 447 would see much more of the proposed road than motorists on State Route 427 and Interstate 80. Existing linear elements in the landscape, such as transmission lines and unpaved roads, are present along the segment visible to these motorists. This would reduce the visual impact of the proposed road somewhat, but the road would still be moderately different from the mixed salt desert scrub visually dominant across the project area from this view. With time, the road surface would weather and fade, and restored vegetation would become established and grow closer to appearance to natural vegetation undisturbed by the project. Motorists routinely travelling past the project area on Interstate 80 and State Routes 427 and 447 would acclimate to the road's appearance in the landscape over time. This length of time could be short-term or long-term, depending on a particular individual's sensitivity and tolerance to change.

Indirect Impacts

The Proposed Action Alternative would have no indirect impacts on the visual component of the environment.

Cumulative Impacts

Past and present actions that have altered the visual character of the cumulative effects analysis area include the construction of numerous roads, construction of Wadsworth, addition of overhead transmission lines and fences, and conversion of natural vegetation to agricultural fields. Areas converted to agricultural fields are irrigated and support crops that are much more green and dense than natural vegetation. The irrigation system includes a network of linear ditches and berms that are apparent but contrast weakly against crops, which are planted in rows. Roads and development in Wadsworth have permanently removed vegetation and added surfaces different in texture and colors from vegetation. Roads, transmission lines, and fences have added linear elements that are visually apparent in the otherwise non-linear landscape. Structures in Wadsworth have sharp, well-defined edges and angular shapes that are quite different than vegetation cover, which generally has undefined edges and organic, non-angular shape. Although road construction and the development of Wadsworth altered the original landscape, many years, if not decades, have passed since most of the structures and roads were constructed. Consequently these have become part of the normal visual character of the cumulative effects assessment area.

According to the Comprehensive Resource Management Plan for the Reservation, a large part of the cumulative effects analysis area is planned for future residential, commercial, and industrial development. Applications and design plans have not been submitted for specific projects associated with this planned growth, and therefore, would presumably occur outside of and after the temporal boundary of the cumulative effects analysis.

(d) Public Health and Safety

No Action Alternative

The No Action Alternative would result in the continued traffic on State Route 447 through residential areas of Wadsworth and immediately past Natchez Elementary School. The potential hazards that are generated from the traffic in these areas would continue at current levels. Although the continued hazards would have negative impacts on public health and safety, the No Action Alternative would not exacerbate the hazards. Therefore, this alternative would not have any direct, indirect, or cumulative impacts on public health and safety.

Proposed Action Alternative

During construction of the project, equipment and vehicles stored and operated within the project area would contain normal quantities of petroleum-based products essential for their operation, such as diesel fuel or motor oil. A designated refueling area would be located at the construction staging area, where above-ground storage containers would be used to refuel and replenish equipment reservoirs as needed. Rupture or structure failure of a storage tank, or spillage of

petroleum product, would not be anticipated to have any direct impacts on public health and safety but would have potential indirect impacts.

Accidental spills of petroleum-based fluids could also contaminate soils in the area and kill vegetation. Spillage of petroleum-based fluids would result in an easily ignitable and flammable substance into an area already susceptible to wildland fires due to an arid climate. If ignited, a wildland fire would produce smoke that could potentially reduce air quality in Wadsworth temporarily until extinguished. There would also be potential for the fire to spread, possibly into the Wadsworth community. The potential indirect impacts associated with hazardous waste spills and wildland fires would be prevented by implementation of the environmental protection measures listed in Section 6.1.

Traffic volume on State Route 447 would decrease from existing levels once the proposed bypass road is constructed. The potential for vehicle accidents and hazards associated with the existing State Route 447 traffic, particularly within residential areas of Wadsworth and near Natchez Elementary School, would be reduced once the bypass road is constructed and receives the traffic.

Although traffic in the Wadsworth community would decrease once the proposed road is constructed, existing traffic volume in the general Wadsworth area would not be affected. The proposed road is approximately 3,200 feet west of Wadsworth. Greenhouse gas emissions are not likely to be dispersed or dissipate by any detectable amount from shifting the emission source approximately 3,200 feet from its current location. Construction equipment would be operated intermittently and temporarily during the estimated 6-month construction period. Intermittent operation of construction equipment during this period would not have a detectable effect on greenhouse gases in the area.

Direct impacts on public health and safety would not result from implementation of the Proposed Action Alternative. Environmental protection measures would prevent any potential indirect impacts on public health and safety. Because the Proposed Action Alternative would not result in an increase in traffic volume, it would not have any contribution to greenhouse gas emissions. Therefore, there would be no cumulative impacts on public health and safety resulting from the Proposed Action Alternative.

5.0 SECTION 4(F) EVALUATION

Section 4(f) was included as a special provision of the U.S. Department of Transportation Act of 1966, and was later codified as 23 USC 138 and 49 USC 138. Section 4(f) states that the FHWA cannot approve the use of land from publicly owned parks, recreational areas, wildlife and waterfowl refuges, or any significant public or private historic sites unless the following conditions apply:

- There is no feasible and prudent alternative to the use of land; and
- The Proposed Action includes all possible planning to minimize harm to the property resulting from such use.

In 2005, Congress made the first substantive amendment to Section 4(f) since 1966 when it enacted the Safe, Accountable, Flexible, Efficient Transportation Equity Act: A Legacy for Users (SAFETEA-LU). Section 6009 of the SAFETEA-LU amended Section 4(f) legislation to simplify the process and approval of projects having only de minimis impacts on lands affected by Section 4(f). Under the amended legislation, once the U.S. Department of Transportation determines that a transportation use of Section 4(f) property results in a de minimis impact, analysis of avoidance alternatives are not required and the Section 4(f) evaluation process is complete. Section 6009 also required the U.S. Department of Transportation to issue regulations clarifying the factors to be considered and the standards to be applied when determining if an alternative for avoiding the use of a Section 4(f) property is feasible and prudent. In 2008, the FHWA issued a Final Rule on Section 4(f) which clarified the 4(f) approval process and simplified its regulatory requirements. In addition, Section 4(f) regulation was moved to 23 CFR 774 with the issuance of the Final Rule.

5.1 PROPOSED ACTION

The Proposed Action consists of the BIA Division of Transportation granting a right-of-way necessary to facilitate the construction of the proposed project on the Reservation in Wadsworth, Nevada. The NDOT in cooperation with the FHWA have proposed construction of the project and the right-of-way would be granted to NDOT. The proposed project consists of construction of PLIR 35(1), or the Wadsworth Bypass Road, and all associated shoulders, embankments, culvert crossings, and related infrastructure. The proposed bypass road would begin approximately 1 mile southwest of Wadsworth, at NDOT Station Line “W” 57+78± on State Route 427 and terminate approximately 2.5 miles northwest of Wadsworth on State Route 447 at NDOT Station Line “IS” 143+75±. New intersection designs, including realignment and reconstruction of approximately 0.2 mile of Olinghouse Road where it would be intersected by the proposed bypass road, would also be required and constructed.

The proposed federal action is granting of right-of-way by the BIA, and new road construction using either Tribal Transportation Program funds and/or federal-aid highway funds that the FHWA has allocated to NDOT. The granting of right-of-way and expenditure of federal funds constitute federal actions and are necessary for construction and operation of the proposed project.

The purpose of the Proposed Action is to provide an alternative means of conveying highway traffic around the community of Wadsworth. The proposed action is needed because currently, State Route 447 traffic on its way to Pyramid Lake and destinations north of Wadsworth pass through the residential areas of Wadsworth and immediately past Natchez Elementary School. Pyramid Lake can attract substantial numbers of visitors on holidays and during prime fishing seasons and special events in the Black Rock Desert, such as the annual Burning Man event, draw large numbers of participants. The traffic volume in Wadsworth typically becomes concentrated and intense during these periods, which poses a public safety concern.

In addition, the proposed bypass road should serve the land immediately north and northwest of the residential-core of Wadsworth that is already planned for development and direct additional traffic generated from that development away from Wadsworth's residential core. For more information about the purpose and need of the project, see Section 1.0, Purpose and Need.

5.2 SECTION 4(F) RESOURCES

The BIA and FHWA have recommended that two historic ditch segments as eligible for nomination to the National Register of Historic Places under Criterion A: Garavanta Ditch (site 26Wa9386) and Wadsworth Light and Power Co. Ditch (site 26Wa9388). In a letter dated April 21, 2014, the Pyramid Lake Paiute Tribe THPO concurred with these recommendations (Appendix C). Thus, both sites are considered significant historic sites for the purposes of compliance with Section 4(f). Although only one of these ditches is still operation, both are part of an overall larger irrigation system serving much of the agricultural lands west and south of Wadsworth. Each of these historic sites is described in more detail in Section 3.5, Cultural Resources.

5.3 IMPACTS TO SECTION 4(F) RESOURCES

The Proposed Action Alternative and the No Action Alternative were carried forward for analysis in the EA and are discussed in Section 2.2, Alternatives.

The No Action Alternative would not result in construction of any part of the proposed project. Neither the Garavanta Ditch (site 26Wa9386) or the Wadsworth Light and Power Co. Ditch (site 26Wa9388) would be affected in any manner as existing conditions would not be altered by the No Action Alternative. Accordingly, there would be no historic sites affected by this alternative,

either as a whole or to any of the character-defining features qualifying the sites as eligible for nomination to the National Register of Historic Places under Section 106 of the NHPA. However, the No Action Alternative would not meet the purpose and need of the proposed project.

Implementation of the Proposed Action Alternative would result in the proposed bypass road crossing the Garavanta Ditch (site 26Wa9386) in a single location and the Wadsworth Light and Power Co. Ditch (site 26Wa9388) in a single location. A culvert crossing would be constructed at each historic site that would allow the proposed road to cross while maintaining the functionality of the irrigation ditches and overall irrigation system. Best management practices would be implemented during construction to prevent sedimentation and erosion of the ditches.

Because neither of the two historic irrigation ditch segments can be avoided by the proposed project, treatment measures were conducted in order to mitigate the effects to these historic sites under Criterion A. Measures included photographic documentation and archival research. It was the recommendation of Kautz Environmental Consultants, Inc. that development and implementation of these measures adequately mitigated the potential effects of the proposed project, and therefore implementation of the Proposed Action Alternative would have no adverse effect to historic site 26Wa9386 or historic site 26Wa9388. In a letter dated April 21, 2014, the Pyramid Lake Paiute Tribe THPO concurred with these recommendations. Accordingly, the Proposed Action Alternative would not have an adverse effect to historic site 26Wa9386. The Proposed Action Alternative would also have no adverse effect to historic site 26Wa9388. A copy of the letter from the Pyramid Lake Paiute Tribe THPO is provided in Appendix C.

5.4 MEASURES TO MINIMIZE IMPACTS

As described above, two alternatives were carried forward for analysis in the EA, the Proposed Action Alternative (Section 2.2.2) and the No Action Alternative (Section 2.2.1). The impacts on significant historic sites resulting from each alternative are noted above in Section 5.3, Impacts to Section 4(f) Resources. As noted above, the No Action Alternative fails to meet the purpose and need of the proposed project. No other alternatives were able to meet the purpose and need of providing for improved traffic operations and pedestrian safety in Wadsworth during periods of increased traffic volumes, or serving the land north and northwest of the residential-core of Wadsworth that is planned for development.

As noted above, treatment measures were conducted in order to mitigate the effects to these historic sites as a result of implementation of the Proposed Action Alternative. It was the recommendation of Kautz Environmental Consultants, Inc. that development and implementation of these measures adequately mitigated the potential effects of the proposed project, and therefore implementation of the Proposed Action Alternative would have no adverse

effect to historic site 26Wa9386 or historic site 26Wa9388. Concurrence with the "no adverse effect" recommendation by the Pyramid Lake Paiute Tribe THPO is pending.

5.5 FINDING OF DE MINIMIS IMPACTS

As previously noted, Section 6009 of the SAFETEA-LU amended existing Section 4(f) legislation to simplify the processing and approval of projects that have only "de minimis" impacts on lands protected by Section 4(f). Under the amended legislation, once the U.S. Department of Transportation determines that a transportation use of Section 4(f) property results in a de minimis impact, analysis of avoidance alternatives are not required and the Section 4(f) evaluation process is complete. Section 6009(a)(2) states that with respect to historic sites, a de minimis finding may be made if a program or project is determined, in compliance with Section 106 of the NHPA, to have "no adverse effect" on a historic site or if there are "no historic properties affected".

The FHWA, BIA, and NDOT have made a determination that the Proposed Action Alternative would have no adverse effect on historic site 26Wa9386 or 26Wa9388 under Section 106 of the NHPA. This determination, which was concurred by the Pyramid Lake Paiute Tribe THPO, satisfy the Section 4(f) provisions added by Section 6009 of SAFETEA-LU. There are no other properties or land affected by Section 4(f) known to occur within the project area. Accordingly, it is concluded that the Proposed Action Alternative would have de minimis impacts and that an analysis of feasible and prudent avoidance alternatives under Section 4(f) is not required. Concurrence on the de minimis impacts determination by Pyramid Lake Paiute Tribe THPO is provided in a letter dated April 2014 (see Appendix C).

5.6 SECTION 4(F) COORDINATION/CONSULTATION

In January 2012, the BIA and FHWA determined that there were two sites "eligible" for nomination to the National Register of Historic Places within the project area, and that the proposed project would have "no adverse effect" on either of the sites. An eligibility and effect determination for the proposed projects was submitted to the Pyramid Lake Paiute Tribe THPO in February 2012 for review and concurrence. The THPO was notified of the BIA, FHWA and NDOT's collective intent to use the “no adverse effect” determination as the basis for a finding of de minimis impacts in accordance with Section 6009(a)(2) of the SAFETEA-LU. Concurrence with the determination by the Pyramid Lake Paiute Tribe THPO is provided in a letter dated April 2014 (see Appendix C).

6.0 MITIGATION MEASURES

6.1 PROJECT MITIGATION

In order to reduce or eliminate negative affects to the Human Environment, the following mitigation measures, including best management practices, would be incorporated into the design and construction of the Proposed Action Alternative. The contractor(s) selected to construct the proposed project would be responsible for implementing the measures listed below, and may implement additional best management practices that are not listed below.

General

The construction contractor(s) shall be required to provide documentation which demonstrates compliance with the NEPA and other applicable federal regulations for construction equipment yards, material sources, and haul roads, or other surface disturbances that are not covered in this EA document.

Vegetation

All temporary, short-term construction disturbances shall be reclaimed. Reclamation shall include seeding disturbed areas with native species to restore vegetation cover. Reclamation seed mixes shall be certified as weed-free.

The removal of trees shall be avoided to the extent feasible during construction. The trunk sections of any trees that are removed during construction shall be cut into 2-foot sections and left in the right-of-way for Tribal members to collect for firewood. The remaining vegetation that is cleared and removed shall be mulched and stockpiled within the project area for use during reclamation and/or disposed of at an authorized facility.

Construction of the proposed project shall be in compliance with Executive Order 13112 regarding noxious weeds, and state regulations pertaining to noxious weeds (Nevada Revised Statue 555.005 and NAC 555.010).

A Noxious Weed Management Plan shall be developed and implemented to control the establishment of noxious weeds in and around areas disturbed from construction activities. The Noxious Weed Management Plan shall address prevention, control, and treatment of noxious weeds, both prior to and following construction, as applicable. Control and treatment of noxious weeds following construction may include routine monitoring of the project area until reclamation vegetation has sufficiently established disturbed areas.

All earth-moving and construction equipment shall be washed at the staging or storage area prior to arriving on the construction site in order to prevent the introduction of noxious weed seed into

the project area. Similarly, all earth-moving and construction equipment shall be washed prior to leaving the construction site to prevent noxious weed seeds from leaving the site.

All gravel and/or fill material used for project construction shall be certified as weed-free. Fiber rolls, straw bales, and other materials used for sediment and erosion control during construction shall also be certified as weed free.

Water Resources & Soils

Construction surface disturbance shall not commence until the contractor(s) selected to construct the proposed project have obtained a Construction Storm Water Permit through NDEP. Compliance with the permit requires that the contractor(s) develop and implement a SWPPP. The SWPPP shall describe how the contractor(s) will satisfy the storm water permit requirements for preventing and controlling pollutants in runoff from the construction site or project area. The SWPPP shall include, at a minimum, site maps showing drainage and discharge locations, and the locations of control measures; a description of the site and of the pollution prevention best management practices (i.e., erosion and sediment controls); and inspection and maintenance procedures and reports.

Best management practices (i.e., erosion and sediment controls) such as silt fences, berms and diversions, and fiber rolls shall be installed during construction to reduce the potential for soil erosion and prevent sedimentation of surface waters. Best management practices shall be installed in accordance with the SWPPP, and shall remain installed following construction until the site is stabilized.

The construction contractor(s) would adhere to all applicable tribal, state, and federal regulations when obtaining construction water.

Construction of the culvert crossing at the Garavanta Ditch, which is a WOUS, qualifies for a Nationwide Permit 14 for linear transportation projects. Because the total impacts to WOUS associated with the proposed project would be less than 0.1 acre and the impact would not occur within a special aquatic site, submittal of a preconstruction notification to the USACE District Engineer would not be required.

Air Quality

Water shall be applied as needed to control dust during all phases of the construction. Areas included are construction site access roads, graded surfaces, and any other areas contributing to dust generation as a result of the proposed project.

Migratory Birds

Surface disturbance activities occurring within the project area during the migratory bird nesting season (April 1 to July 15) shall be performed only after a migratory bird nesting survey has been performed. In accordance with the Migratory Bird Treaty Act, if an active nest is observed within the project area, all construction work activity shall stop in the immediate vicinity of the nest and the Western Field Office biologist shall be contacted.

Cultural Resources

Any archaeological or historical artifacts or remains discovered during construction shall be left intact and undisturbed, all work in the area shall stop immediately, and the Western Regional Office Archaeologist and the THPO shall be notified immediately pursuant to 36 CFR 800.13. Commencement of operations shall be allowed upon notification by the Western Regional Office Archaeologist.

If during construction operations any human remains, funerary objects, sacred objects or object of cultural patrimony as defined in the Native American Graves Protection and Repatriation Act (PL 101-601; Statute 3048; 25 USC 3001) are discovered, operations shall stop in the immediate area of discovery and protection of the remains and objects shall be provided. The Western Regional Office Archaeologist and the THPO shall be notified immediately of the discovery by telephone with written confirmation to follow. Protection of the immediate area of the discovery shall continue until notification that operations may continue is provided by the Western Office Region Archaeologist.

Ground disturbing activities resulting from construction of the proposed project, including relocation of existing power poles shall only occur in areas which have been included in a Class III cultural resources inventory.

Visual Resources

In the event of construction during night hours, equipment lights shall be limited to those required to safely perform the construction activities, and shall be shielded or directed in a manner that focuses direct light to the immediate work area. Dark-sky resources shall be protected to the extent feasible.

Public Health and Safety

Handling, storage, and disposal of hazardous materials and solid wastes would be conducted in conformance with federal and state regulations to prevent soil, groundwater, or surface water contamination and associated adverse effects on the environment or human health and safety. All construction wastes and byproducts, including construction debris, surplus materials, solid waste, and petroleum-based products shall be removed from the project area once construction has been

completed. Waste material shall be disposed of in landfills that meet U.S. Environmental Protection Agency regulatory requirements for sanitary landfills.

A designated refueling area shall be located at the construction staging area, where above-ground storage containers shall be used to refuel and replenish equipment reservoirs as needed. Secondary containment structures shall be provided for all storage containers holding petroleum-based products during construction.

Equipment storage, maintenance, and repairs shall be performed at the construction staging area. Absorbent pads or sheets shall be placed under likely spill sources, such as parked equipment, and spill kits shall be maintained on-site during construction.

Adequate firefighting equipment would be kept on-site at all locations where active construction is occurring. Firefighting equipment shall include such items as shovels, Pulaski axes, fire extinguishers, water supplies, or similar tools and equipment. All wildfires shall be reported to the Pyramid Lake Fire Department immediately upon discovery.

6.2 ADAPTIVE MANAGEMENT

The Department of the Interior recently adopted an operational definition of adaptive management for the purposes of managing operational programs in the context of ecosystem management. An executive summary is available at:

http://www.doi.gov/initiatives/AdaptiveManagement/TechGuide/execsumm.pdf.

The construction of the Wadsworth Bypass Road is a project-specific action and not an operational program with ecosystem management implications. Therefore, adaptive management strategies are not applicable.

7.0 CONSULTATION AND COORDINATION

7.1 CONSULTATION

The individuals or agencies, including Tribal authorities, listed below were consulted with during the preparation of this EA. Consultation requirements with the THPO, in accordance with Section 106 of the NHPA, as amended, have been completed. Consultation with the USFWS in accordance with Section 7 of the Endangered Species Act has been completed. Other conditions relating to this project, including compliance with Tribal ordinances and other appropriate Federal, State, and local regulations have been adhered to and/or completed by the BIA, Western Regional Office.

Vinton Hawley	Tribal Chairman, Pyramid Lake Paiute Tribe
Johnnie Garcia	Transportation Planner, Transportation Planning Department, Pyramid Lake Paiute Tribe
Bonnie Akaka-Smith	Interim Director, Environmental Department, Pyramid Lake Paiute Tribe
Fannie Ely	Water Quality Manager, Water Resources Department, Pyramid Lake Paiute Tribe
Betty Aleck	Pyramid Lake Paiute Tribe Tribal Historic Preservation Officer
Edward Koch	Nevada State Supervisor, Nevada Fish and Wildlife Office, USFWS
Rudy Malfabon, P.E.	Director, NDOT
Barbi Malinky Harmon, M.A.	Principal Investigator, Kautz Environmental Consultants, Inc.

Agencies (Website)
BIA
U.S. Environmental Protection Agency
U.S. Census Bureau
USACE
FHWA
U.S. Geological Survey
NDEP
NDOT
Nevada Department of Wildlife
Nevada Natural Heritage Program

7.2 APPLICABLE REGULATORY REQUIREMENTS

The selected statutes, regulations, and executive orders pertaining to the preparation of this EA include the following:

- Clean Air Act of 1963, as amended;
- Clean Water Act of 1977, as amended;
- Comprehensive Environmental Response, Compensation, and Liability Act of 1980, as amended;
- Endangered Species Act of 1973, as amended;
- Executive Order 11988 (Floodplain Management), May 1977;
- Executive Order 11990 (Protection of Wetlands), May 1977;
- Executive Order 12898 (Federal Actions to Address Environmental Justice in Minority Populations and Low Income Populations), February 1994;
- Executive Order 13101 (Greening the Government), 1998;
- Executive Order 13274 (Environmental Stewardship and Transportation Infrastructure Project Reviews);
- FPPA of 1994;
- Fish and Wildlife Coordination Act of 1934, as amended;
- Migratory Bird Treaty Act of 1918, as amended;
- NEPA, as amended;
- National Historic Preservation Act of 1966, as amended;
- Native American Graves Protection and Repatriation Act of 1990;
- Religious Freedom Restoration Act of 1993;
- Resource Conservation and Recovery Act of 1976;
- Safe Drinking Water Act of 1974, as amended;
- Section 4(f) of U.S. Department of Transportation Act (49 USC 303); and
- Wild and Scenic Rivers Act of 1968.

In addition to the statutory and regulations listed above, other Acts, Orders, Memorandums, and Policies specific to actions on tribal lands that were considered and/or adhered to include the following:

- American Indian Religious Freedom Act of 1978;
- Executive Order 13175, Consultation and Coordination with Indian Tribal Governments;
- Secretarial Order 3175, Protection of Indian Trust Assets (changed to Departmental Manual Order Release 512DM2);
- Executive Order 13007 (Indian Sacred Sites), 1996;
- Secretarial Order 3206, American Indian Tribal Rights, Federal-Tribal Trust Responsibility and Endangered Species Act;

- President's Memorandum of April 29, 1994, Government-to-Government Relations with Native American Tribal Governments; and
- BIA Government-to-Government Consultation Policy (December 13, 2000).

8.0 LIST OF PREPARERS

This EA was prepared by Stantec. The staff members specifically responsible for the preparation of the document are listed in Table 15.

Table 15 List of Preparers

Name	Role/Organization
Nancy Kang	Project Manager, Stantec Consulting Services Inc.
George Dix	Environmental Scientist, Stantec Consulting Services Inc.
Dave Worley	Senior Biologist, Stantec Consulting Services Inc.
Kim Carter	Administrative Assistant, Stantec Consulting Services Inc.

The individuals listed in Table 16 contributed to the development or review of this EA.

Table 16 List of Contributors

Name	Organization
Chip Lewis	Regional Environmental Protection Officer, Division of Transportation, BIA, Western Regional Office
Scott Schmidgall, P.E.	Supervisory Highway Design Engineer, Division of Transportation, BIA, Western Regional Office
Daniel Allen	Realty Specialist, Branch of Realty Estate Services, BIA, Western Nevada Agency
Susan E. Klekar	Division Administrator, FHWA
William Glaser, P.E.	Project Manager, NDOT
Chris Young	Environmental Services Supervisor, NDOT
Rodd Lighthouse, P.E., C.E.M.	Project Manager, Summit Engineering Corporation
Matt Roulias, P.E.	Project Engineer, Summit Engineering Corporation
James Darrough, P.L.S.	Project Design and Administration, Summit Engineering Corporation

9.0 REFERENCES

American Tinnitus Association. 2013. *It's A Noisy World We Live In*. Retrieved on February 25, 2014, from http://www.ata.org/for-patients/how-loud-too-loud.

Ayala & Associates. 2004. *Pyramid Lake Paiute Tribe Transportation Plan*. Reno, Nevada.

Berendt, R. D., Corliss, E. L. R., & Ojalvo, M. S. 2000. *Quieting: A Practical Guide to Noise Control*. Honolulu, Hawaii: University Press of the Pacific.

Cole, C. 2013. *A Cultural Resource Inventory for the Pyramid Lake Paiute Tribe's Proposed Wadsworth Bypass Project Extension Totaling 16.9 Acres, Washoe County, Nevada.* Kautz Environmental Consultants Report 806-Extension Report. Report Submitted to Pyramid Lake Paiute Tribe Tribal Historic Preservation Officer, Nixon.

Cornell University. 2011. *The Cornell Lab of Ornithology: All About Birds: Bird Guide*. Retrieved on August 5, 2011, from: http://www.allaboutbirds.org/guide/search.aspx.

Desert Fishes Council. 2003. Life history of Warner suckers (*Catostomus warnerensis*), Warner Valley, Oregon. Retrieved on August 5, 2011, from: http://www.desertfishes.org/na/catostom/catostom/cwarnere/cwarner2.shtml

Grubb, T.G., Delaney, D.K., & Bowerman, W.W. 2007. *Investigating Potential Effects of Heli-Skiing on Golden Eagles in the Wasatch Mountains, Utah*. Final Report to the Wasatch-Cache National Forest: Study No. RMRS-RWU-4251-P2-2. Fort Collins, Colorado: U.S. Forest Service - Rocky Mountain Research Station.

Malinky Harmon, B., and Harmon, M. R. 2011. *A Cultural Resource Inventory for the Pyramid Lake Paiute Tribe's Proposed Wadsworth Bypass Project, Washoe County, Nevada*. Kautz Environmental Consultants, Inc. Report 806. Report Submitted to Bureau of Indian Affairs, Western Regional Office, Phoenix.

National Institute on Deafness and Other Communication Disorders. 2010. *Common Sounds*. Retrieved on February 25, 2014, from: https://www.nidcd.nih.gov/health/education/teachers/pages/common_sounds.aspx

Nevada Bureau of Mines and Geology. 2005. *Geologic Map of the Wadsworth Quadrangle, Washoe County, Nevada* [map]. Revised Edition. 1:24,000. Nevada Bureau of Mines and Geology, MacKay School of Earth Sciences and Engineering, University of Nevada, Reno. Reno, Nevada.

Nevada Department of Transportation (NDOT). 2006. *Construction Site Best Management Practices Manual*. Carson City, Nevada.

Nevada Department of Transportation (NDOT). 2009. *Construction Manual*. Carson City, Nevada: Nevada Department of Transportation.

Nevada Department of Transportation (NDOT). 2013. *2012 Annual Traffic Report*. Carson City, Nevada: Nevada Department of Transportation, Traffic Information Division.

Nevada Division of Environmental Protection (NDEP). 2009. *Nevada – PSD Triggered 107(d) Planning Areas* [map]. Available online at: http://ndep.nv.gov/baqp/planmodeling/docs/westar_psd_trigger_areas.pdf.

Nevada Division of Environmental Protection (NDEP). 2013. *Planning and Modeling Branch - Increment Tracking*. Retrieved February 20, 2014, from: http://ndep.nv.gov/baqp/planmodeling/increment.html.

Nevada Division of Environmental Protection (NDEP). 2014a. *Federally Regulated Underground Storage Tanks (UST)* [Data file]. Retrieved from: http://ndep.nv.gov/BCA/file/tank.xls.

Nevada Division of Environmental Protection (NDEP). 2014b. *Project Tracking (PT) Active Cases Snapshot* [Data file]. Retrieved from: http://ndep.nv.gov/BCA/file/active_cases_snapshot.htm.

Nevada Division of Environmental Protection (NDEP). 2014c. *Project Tracking (PT) Snapshot of Confirmed Release Cases Closed Between 01/01/1990 and 01/29/2014*. Retrieved from: http://ndep.nv.gov/BCA/file/closed_cases_snapshot.htm.

Nevada Division of Environmental Protection (NDEP). 2015a. *Closed Facility Inventory* [Date file]. Retrieved from: https://ndep.nv.gov/bwm/Docs/NVClosedFacilityInventory7-15.xlsx

Nevada Division of Environmental Protection (NDEP). 2015b. *Solid Waste Management Facilities*. Retrieved from: https://ndep.nv.gov/bwm/landfill.htm.

Nevada Division of Water Resources. 2010. *Designated Groundwater Basins of Nevada* [map]. 1:750,000 (Topographic). Carson City, Nevada: Nevada Department of Conservation and Natural Resources.

Nevada Natural Heritage Program. 2001a. Rare Plant Fact Sheet, *Rorippa subumbellata*, Tahoe yellowcress. Accessed on August 5, 2011, from: http://heritage.nv.gov/atlas/roripsubum.pdf.

Nevada Natural Heritage Program. 2001b. Rare Plant Fact Sheet, *Eriogonum ovalifolium* var. *williamsiae*, Steamboat buckwheat. Accessed on August 5, 2011, from: http://heritage.nv.gov/atlas/eriogovaliwilli.pdf.

Nevada Natural Heritage Program. 2001c. Rare Plant Fact Sheet, *Ivesia webberi*, Webber ivesia. Accessed on August 5, 2011, from: http://heritage.nv.gov/atlas/ivesiwebbe.pdf.

Peterson, A. 1986. *Habitat suitability index models: Bald eagle (breeding season)*. U.S. Fish and Wildlife Service. Service Biological Report 82(10.126). 25 pp.

Pyramid Lake Paiute Tribe. 2011. *Volume #2: Pyramid Lake Economic Development Plan*. Wadsworth, Nevada: Pyramid Lake Paiute Tribe.

Pyramid Lake Paiute Tribe and Natural Resources Conservation Service (NRCS). 2005. *Pyramid Lake Indian Reservation: Comprehensive Resource Management Plan*. Reno, Nevada: Natural Resources Conservation Service.

Sutter County (California). 2011. *Sutter County General Plan* (Resolution No. 11-029). Sutter County, California: Sutter County Board of Supervisors. Adopted March 29, 2011.

U.S. Bureau of Indian Affairs (BIA). 2012. *Indian Affairs National Environmental Policy Act (NEPA) Guidebook 59 IAM 3-H*. Reston, VA: U.S. Bureau of Indian Affairs.

U.S. Bureau of Indian Affairs, Western Regional Office. 2010. *Biological Evaluation of N6720(1): Sand Springs Bridge (N309) Replacement Project*. Phoenix, Arizona: U.S. Bureau of Indian Affairs, Western Regional Office, Division of Transportation.

U.S. Bureau of Land Management. 2012. *Environmental Assessment: Burning Man 2012-2016, Special Recreation Permit NVW03500-12-01*. Winnemucca, NV: U.S. Bureau of Land Management.

U.S. Census Bureau. 2010a. *American Fact Finder: DP-1: Profile of General Population and Housing Characteristics: 2010: Wadsworth CDP, Nevada* [2010 Demographic Profile Data]. Washington D.C.: U.S. Department of Commerce, U.S. Census Bureau.

U.S. Census Bureau. 2010b. *American Fact Finder: Race Alone or in Combination: 2010: Pyramid Lake CCD, Washoe County, Nevada* [2010 Census Summary File 1]. Washington D.C.: U.S. Department of Commerce, U.S. Census Bureau.

U.S. Environmental Protection Agency. 2010. EJView [mapping database]. Retrieved on September 14, 2011, from: http://epamap14.epa.gov/ejmap/entry.html.

U.S. Environmental Protection Agency. 2014. EnviroMapper for Envirofacts [mapping database]. Retrieved February 13, 2014, from http://www.epa.gov/emefdata/em4ef.home.

U.S. Federal Highway Administration (FHWA). 2010. *Highways and Climate Change*. Retrieved on August 18, 2011, from: https://www.fhwa.dot.gov/hep/climate/ccbrochure.htm.

U.S. Federal Highway Administration (FHWA). 2011a. *Roadway Construction Noise Model – RCNM*. Retrieved on February 25, 2014, from: http://www.fhwa.dot.gov/environment/noise/construction_noise/rcnm/.

U.S. Federal Highway Administration (FHWA). 2011b. *Traffic Noise Model*. Retrieved on February 21, 2014, from: http://www.fhwa.dot.gov/environment/noise/traffic_noise_model/.

U.S. Fish and Wildlife Service (USFWS). 1999. *Utah Field Office Guidelines for Protection of Raptors from Human and Land Disturbances*. Salt Lake City, Utah: Salt Lake City Office, USFWS. 45 pp.

U.S. Fish and Wildlife Service (USFWS). 2001. Arctic peregrine falcon (*Falco peregrinus tundrius*). Retrieved on August 5, 2011, from: http://www.fws.gov/southwest/es/oklahoma/peregrn2.htm.

U.S. Fish and Wildlife Service (USFWS). 2010a. The Lahontan National Fish Hatchery Complex: Species Information: Cui-ui (*Chasmistes cujus*). Retrieved on August 5, 2011, from: http://www.fws.gov/lahontannfhc/fish/cuiui/cuiui.html.

U.S. Fish and Wildlife Service (USFWS). 2010b. Nevada Fish and Wildlife Office: Lahontan cutthroat trout (*Oncorhynchus clarkii henshawii*). Retrieved on August 3, 2011, from: http://www.fws.gov/nevada/protected_species/fish/species/lct.html.

U.S. Fish and Wildlife Service (USFWS). 2010c. Nevada Fish and Wildlife Office: Carson wandering skipper (*Pseudocopaeodes eunus obscurus*). Retrieved on August 5, 2011, from: http://www.fws.gov/nevada/protected_species/inverts/species/cws.html.

U.S. Geological Survey. 1985. *Wadsworth Quadrangle, Nevada* [map]. Provisional Edition. 1:24,000. 7.5 Minute Series (Topographic). Reston, Virginia: U.S. Department of the Interior.

U.S. Geological Survey. 2000. *Basin and Range Province*. Retrieved on July 26, 2011, from: http://www.nationalatlas.gov/tapestry/features/22basinrange.html.

U.S. Geological Survey. 2002. *Physiographic Regions*. Retrieved on July 26, 2011, from: http://www.nationalatlas.gov/tapestry/physiogr/physio.html.

U.S. Geological Survey. 2004. U.S. Geological Survey National Gap Analysis Program. 2004. Provisional Digital Land Cover Map for the Southwestern United States. Version 1.0. RS/GIS Laboratory, College of Natural Resources, Utah State University.

U.S. National Park Service. 2001. *Great Basin: Geology*. Great Basin National Park.

U.S. Soil Conservation Service. 1975. *Soil Survey of Fallon-Fernley Area, Nevada: Parts of Churchill, Lyon, Storey, and Washoe Counties*.

Van Denburgh, A. S., Lamke, R.D., and Hughes, J. L. 1973. *A Brief Water-Resources Appraisal of the Truckee River Basin, Western Nevada*. Water Resources – Reconnaissance Series Report 57. U.S. Geological Survey. 1973.

Washoe County Health District, Air Quality Management Division. 2013. *Washoe County, Nevada: Air Quality Trends (2003-2012)*. Retrieved on February 20, 2014, from http://www.washoecounty.us/repository/files/4/Trends-Report-2003-2012.pdf.

Washington Department of Fish and Wildlife. 2003. *Washington Department of Fish and Wildlife's Priority Habitat and Species Management Recommendations Volume IV: Birds. Golden Eagle (Aquila chrysaetos).* Olympia, Washington: Washington Department of Fish and Wildlife

Western Regional Climate Center. 2010. *Wadsworth 4 N, Nevada (Station 268838), Period of Record General Climate Summary*. Retrieved August 3, 2011, from: http://www.wrcc.dri.edu/cgi-bin/cliMAIN.pl?nv8838.

APPENDIX A

Typical Roadway Cross Sections

UNITED STATES DEPARTMENT OF THE INTERIOR
BUREAU OF INDIAN AFFAIRS
PYRAMID LAKE INDIAN RESERVATION
PLANS FOR T.T.P. PROJECT
P.L.I.R. 35 (1) WADSWORTH BYPASS ROAD
B.I.A. ROUTE 35
WASHOE COUNTY, NEVADA

100% PLAN SET

DESIGN CRITERIA

ROUTE	A.D.T. 2004	A.D.T. 2014	A.D.T. 2034	STA.	DESIGN SPEED	MIN. WIDTH	MAX. GRADE	MIN. CURVE RADIUS (max. "e"= 0.06)	MIN. SIGHT DISTANCE STOPPING	MIN. SIGHT DISTANCE PASSING
S.R. 427	1,500	1,100	1,500							
S.R. 447	1,800	1,000	1,500							
B.I.A. ROUTE 35		1,086	1,495	"35" 10+00 "35" 23+50 "35" 82+00	55 mi/h 65 mi/h 75 mi/h	28 ft. 28 ft. 28 ft.	5% 5% 5%	1,060 ft. 1,660 ft. 2,500 ft.	495 ft. 645 ft. 820 ft.	1,985 ft. 2,285 ft. 2,580 ft.

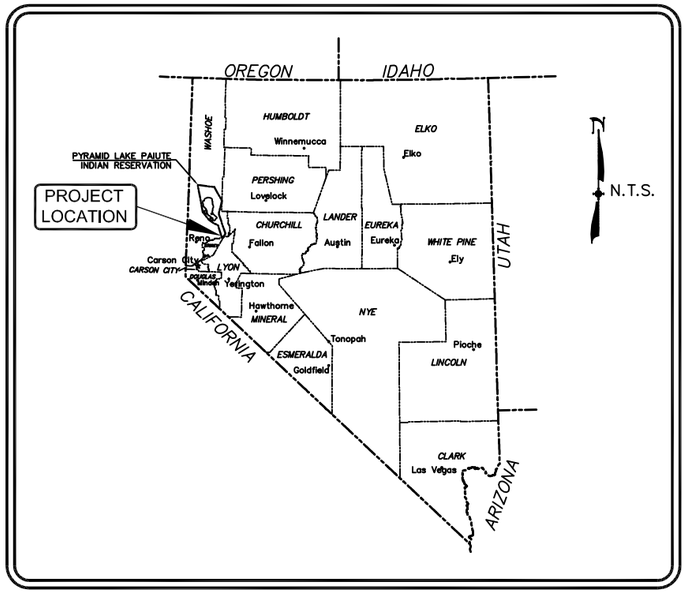

VICINITY MAP

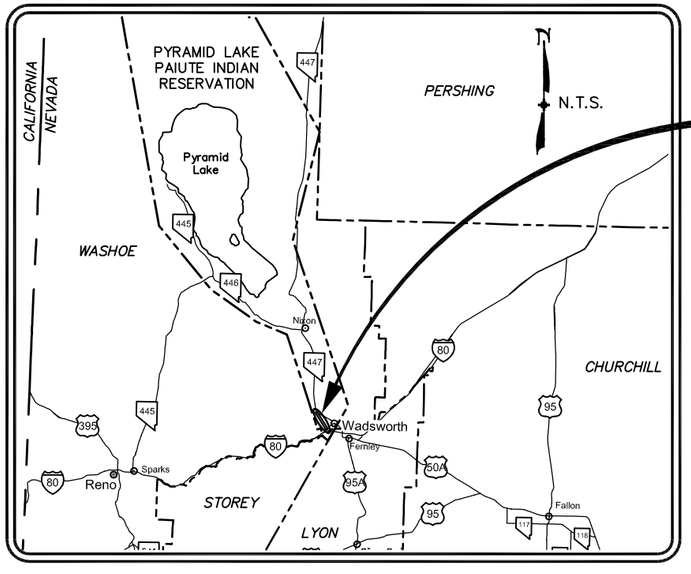

PROJECT LOCATION MAP

P.L.I.R. 35 (1) Wadsworth Bypass
Grading, Drainage, Agg. Base, Hot Mix Asphalt Concrete Surfacing, and Pavement Markings
PROJECT LENGTH= 2.91± MILES

SHEET INDEX

SHEET	SHEET DESCRIPTION
1	TITLE SHEET
2 - 3	TYPICAL SECTION SHEETS
4	PROJECT PLAN MAP
5	GENERAL NOTES AND ABBREVIATIONS
6	QUANTITY LIST
7	CONTROL POINT TABLE
8 - 9	LAND TIES SHEETS
10 - 24	PLANS AND PROFILES
25 - 32	STRIPING AND SIGNAGE PLANS
33 - 37	STRIPING AND SIGNAGE DETAILS
38 - 39	RCB HEADWALL DETAILS
40 - 43	CULVERT DETAILS
44 - 45	CULVERT HEADWALL DETAILS
46	RIP RAP APRON DETAILS
47 - 48	FENCE DETAILS
49 - 50	CATTLE GUARD DETAILS
51 - 52	RCB CULVERT DETAILS
53 - 55	RUMBLE STRIP DETAILS
56	APPROACH ROAD DETAILS
57 - 60	ROADSIDE SIGN DETAILS
61	PAVEMENT MARKING DETAILS
62	GABION DETAILS
63	RETENTION BASIN DETAILS
64	MISCELLANEOUS DETAILS

ENGINEER'S STATEMENT

THESE PLANS HAVE BEEN PREPARED IN ACCORDANCE WITH ACCEPTED ENGINEERING PROCEDURES AND GUIDELINES, AND ARE IN SUBSTANTIAL COMPLIANCE WITH APPLICABLE STATUTES, TRIBAL ORDINANCES, AND FEDERAL CODES. IN THE EVENT OF CONFLICT BETWEEN ANY PORTION OF THESE PLANS AND FEDERAL CODES, THE FEDERAL CODES SHALL PREVAIL.

PROFESSIONAL ENGINEER - STATE OF NEVADA
CLINTON G. THIESSE
Exp. 06-30-16
CIVIL
No. 6159

CLINTON G. THIESSE — P.E. #6159

SUMMIT ENGINEERING CORPORATION
5405 MAE ANNE AVENUE, RENO, NV 89523 PH:(775) 747-8550

DESIGNED BY:
DRAWN BY: jdarrough
CHECKED BY: CGT
Copyright SUMMIT ENG 2016

PLANS FOR I.R.R. PROJECT
P.L.I.R. 35 (1) WADSWORTH BYPASS ROAD
TITLE SHEET
WADSWORTH WASHOE COUNTY NEVADA

REV.	DATE	DESCRIPTION	BY	APP'D

SCALE
HORIZ: NTS
VERT:
JOB #: 129209

N:\DWGS\129209_WadsBypass\Rd\Civil1_WBR_TITLE.DWG - 9:05 AM * 27-APR-2016

100% PLAN SET

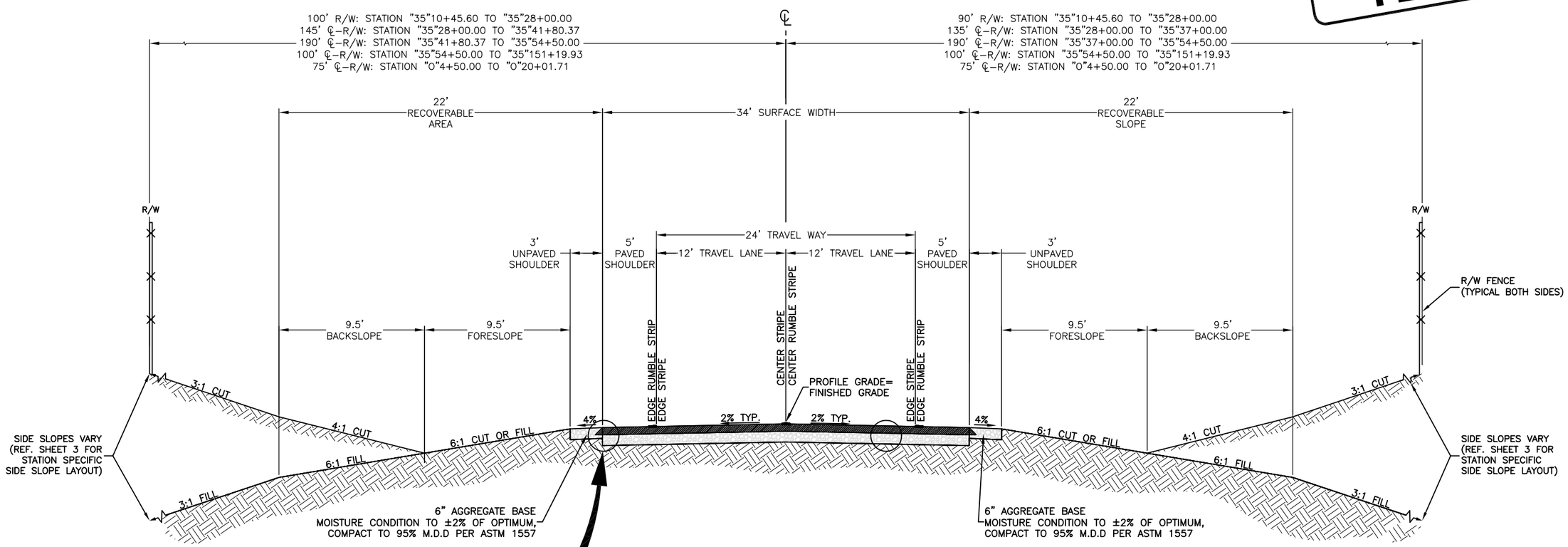

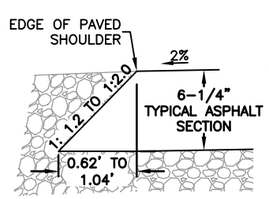

SAFETY EDGE* DIMENSIONS
(TYPICAL BOTH SIDES)
* REF. SHEET 43 FOR DETAIL

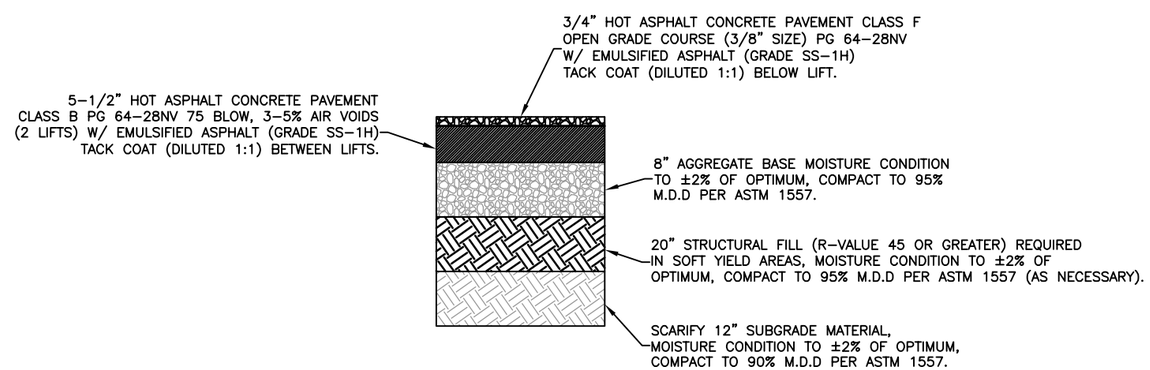

PROJECT LENGTH	
WADSWORTH BYPASS ROAD "35" STA 10+15.17 TO 150+50.00 = 14,034.83'	
OLINGHOUSE ROAD "O" STA 4+50.00 TO 9+00.39, STA 11+00.39 TO 19+91.71 = 1,341.71'	
Total Length in Feet	= 15,376.54
Total Length in Miles	= 2.91

WADSWORTH BYPASS ROAD ROUTE 35 (1)
(INCLUDES OLINGHOUSE ROAD)
TYPICAL STRUCTURAL SECTION

PROFESSIONAL ENGINEER - STATE OF NEVADA
CLINTON G. THIESSE
Exp. 06-30-16
CIVIL
No. 6159

SUMMIT ENGINEERING CORPORATION
5405 MAE ANNE AVENUE, RENO, NV 89523 PH:(775) 747-8550

DESIGNED BY: JD
DRAWN BY: jdarrough
CHECKED BY: CT
Copyright SUMMIT ENG 2016

PLANS FOR I.R.R. PROJECT
P.L.I.R. 35 (1) WADSWORTH BYPASS ROAD
TYPICAL SECTION SHEET
WADSWORTH WASHOE COUNTY NEVADA

REV.	DATE	DESCRIPTION	BY	APP'D

SCALE
HORIZ: NTS
VERT:
JOB #: 129209
N:\DWGS\129209_WadsBypassRd\Civil\2_3_WBR_TYPSECT.DWG - 9:25 AM - 29-APR-2016

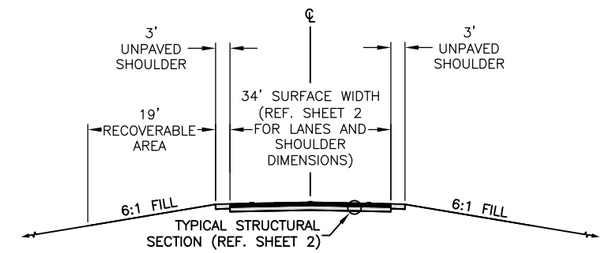

WADSWORTH BYPASS ROAD ROUTE 35 (1)
SIDE SLOPE LAYOUT #1
(STA. "35" 10+40 - 15+50)
(STA. "35" 18+75 - 28+50)
(STA. "35" 100+25 - 130+04.98)

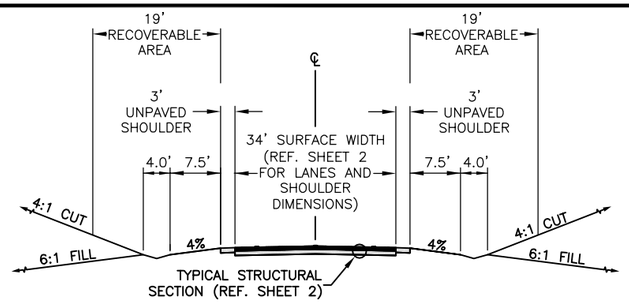

WADSWORTH BYPASS ROAD ROUTE 35 (1)
SIDE SLOPE LAYOUT #2
(STA. "35" 15+50 - 16+50)

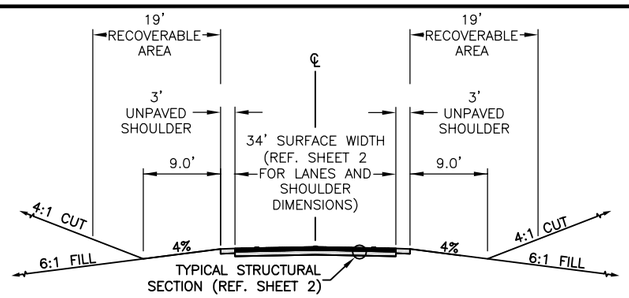

WADSWORTH BYPASS ROAD ROUTE 35 (1)
SIDE SLOPE LAYOUT #3
(STA. "35" 16+50 - 18+75)

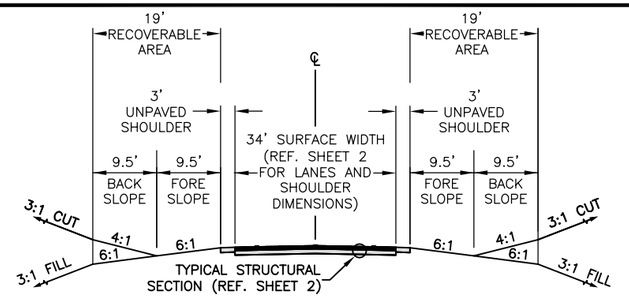

WADSWORTH BYPASS ROAD ROUTE 35 (1)
SIDE SLOPE LAYOUT #4
(STA. "35" 28+50 - 31+00)
(STA. "35" 33+50 - 34+00)

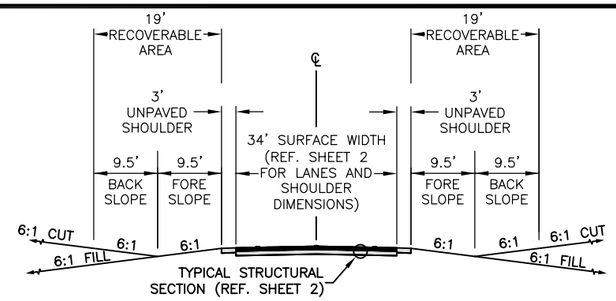

WADSWORTH BYPASS ROAD ROUTE 35 (1)
SIDE SLOPE LAYOUT #5
(STA. "35" 31+25 - 33+50)
(STA. "35" 88+50 - 100+25
(STA. "O" 4+50 - 20+01.71)

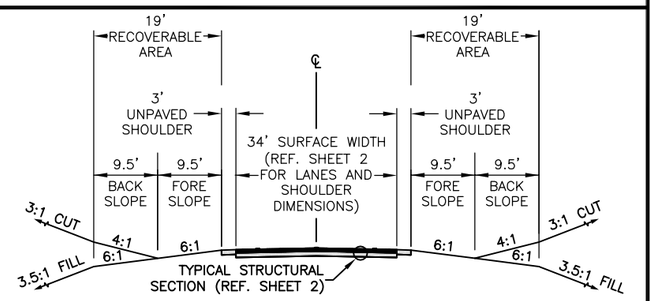

WADSWORTH BYPASS ROAD ROUTE 35 (1)
SIDE SLOPE LAYOUT #6
(STA. "35" 34+00 - 42+00)

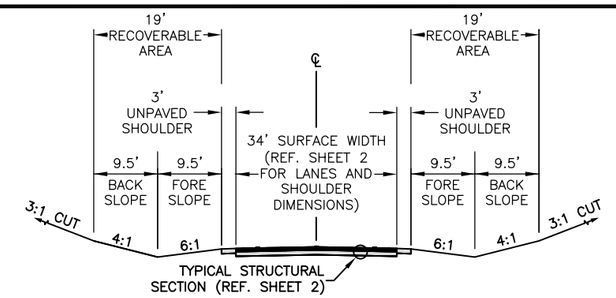

WADSWORTH BYPASS ROAD ROUTE 35 (1)
SIDE SLOPE LAYOUT #7
(STA. "35" 42+00 - 73+37.62)

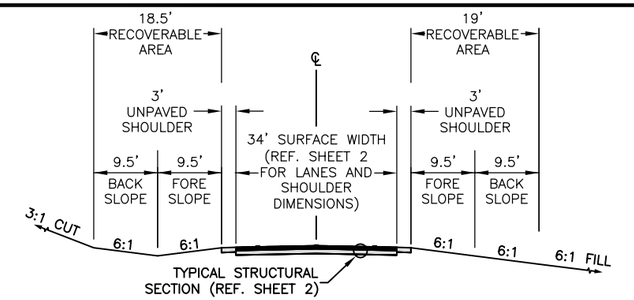

WADSWORTH BYPASS ROAD ROUTE 35 (1)
SIDE SLOPE LAYOUT #8
(STA. "35" 73+37.62 - 88+50)

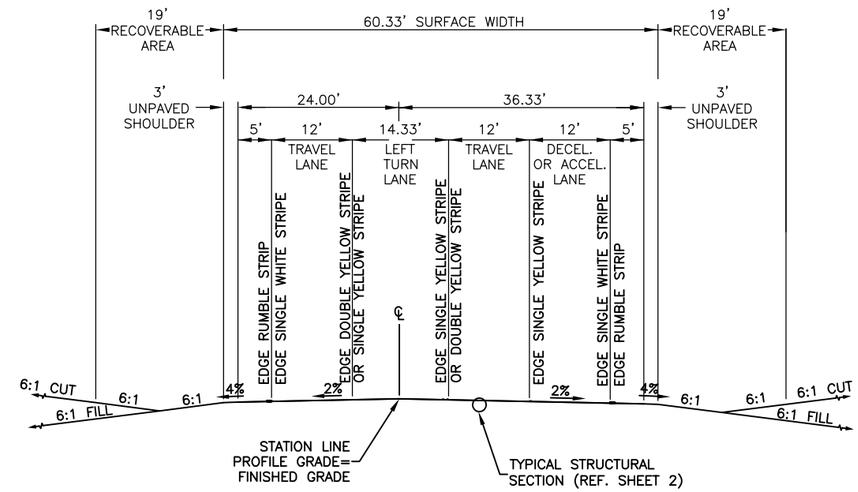

WADSWORTH BYPASS ROAD ROUTE 35 (1)
SIDE SLOPE LAYOUT #9
(STA. "35" 132+10.59 - 142+61.93)

100% PLAN SET

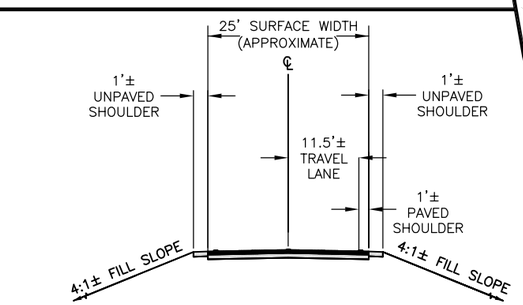

WADSWORTH BYPASS ROAD ROUTE 35 (1)
SIDE SLOPE LAYOUT TIE-IN
(STA. "35" 151+18.73)
(STA. "O" 19+91.71)

NOTES:
1) REFER TO TYPICAL SECTION SHEET 2 FOR ALL STRUCTURAL SECTION REQUIREMENTS AND RIGHT-OF-WAY WIDTHS.
2) STATION RANGES NOT SHOWN ABOVE SHALL BE CONSIDERED TRANSITION SECTIONS BETWEEN SLOPE LAYOUTS.

PROFESSIONAL ENGINEER - STATE OF NEVADA
CLINTON G. THIESSE
Exp. 06-30-16
CIVIL
No. 6159

SUMMIT ENGINEERING CORPORATION
5405 MAE ANNE AVENUE, RENO, NV 89523 PH:(775) 747-8550

DESIGNED BY: JD
DRAWN BY: jdarrough
CHECKED BY: CT
Copyright SUMMIT ENG 2016

PLANS FOR I.R.R. PROJECT
P.L.I.R. 35 (1) WADSWORTH BYPASS ROAD
TYPICAL SECTION SHEET
WADSWORTH WASHOE COUNTY NEVADA

REV.	DATE	DESCRIPTION	BY	APP'D

SCALE
HORIZ: NTS
VERT:
JOB #: 129209

N:\DWGS\J29209_WadsBypassRd\Civil\2_3_WEBR_TYPSECT.DWG - 5:00 PM * 26-APR-2016

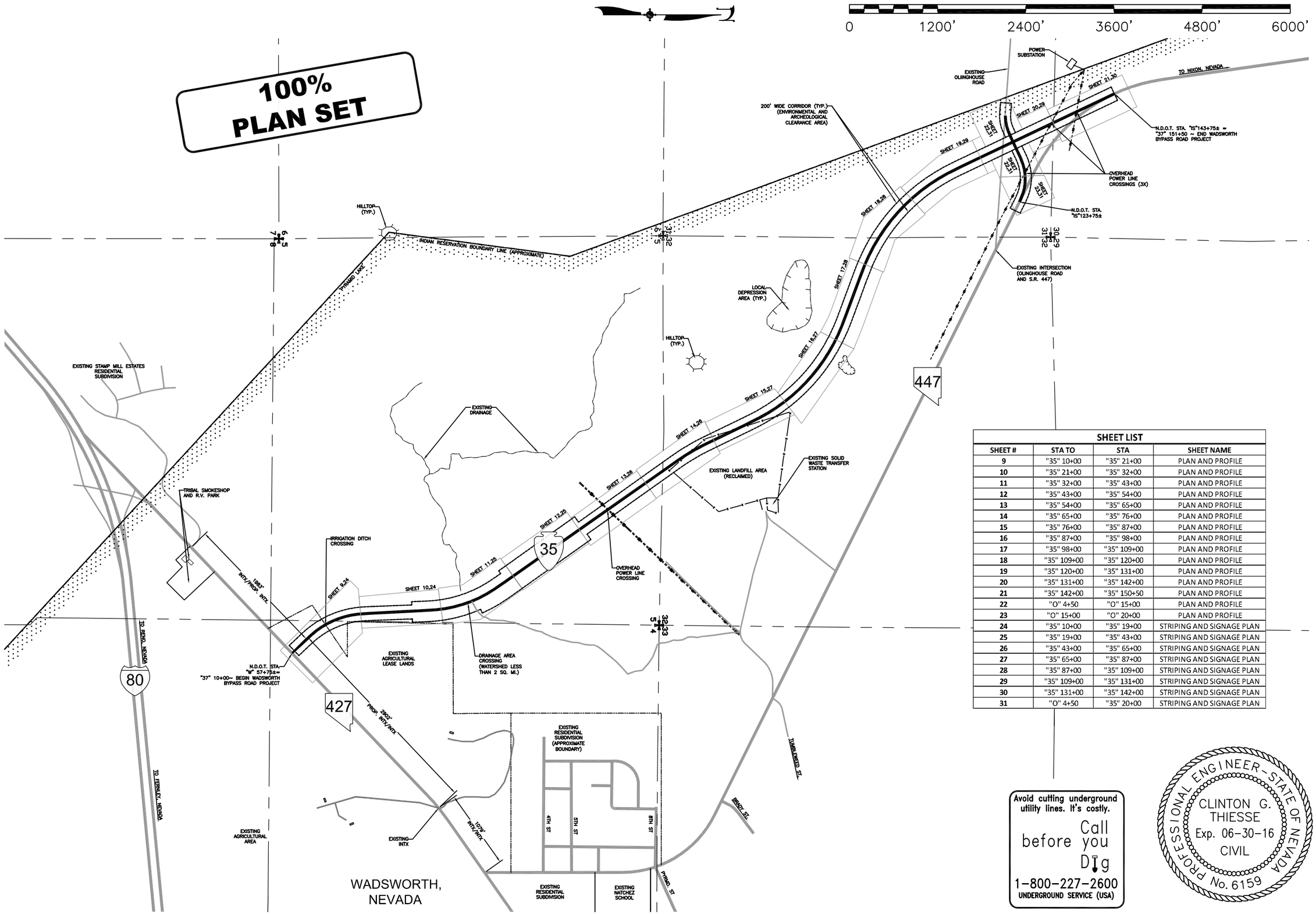

SHEET LIST			
SHEET #	STA TO	STA	SHEET NAME
9	"35" 10+00	"35" 21+00	PLAN AND PROFILE
10	"35" 21+00	"35" 32+00	PLAN AND PROFILE
11	"35" 32+00	"35" 43+00	PLAN AND PROFILE
12	"35" 43+00	"35" 54+00	PLAN AND PROFILE
13	"35" 54+00	"35" 65+00	PLAN AND PROFILE
14	"35" 65+00	"35" 76+00	PLAN AND PROFILE
15	"35" 76+00	"35" 87+00	PLAN AND PROFILE
16	"35" 87+00	"35" 98+00	PLAN AND PROFILE
17	"35" 98+00	"35" 109+00	PLAN AND PROFILE
18	"35" 109+00	"35" 120+00	PLAN AND PROFILE
19	"35" 120+00	"35" 131+00	PLAN AND PROFILE
20	"35" 131+00	"35" 142+00	PLAN AND PROFILE
21	"35" 142+00	"35" 150+50	PLAN AND PROFILE
22	"O" 4+50	"O" 15+00	PLAN AND PROFILE
23	"O" 15+00	"O" 20+00	PLAN AND PROFILE
24	"35" 10+00	"35" 19+00	STRIPING AND SIGNAGE PLAN
25	"35" 19+00	"35" 43+00	STRIPING AND SIGNAGE PLAN
26	"35" 43+00	"35" 65+00	STRIPING AND SIGNAGE PLAN
27	"35" 65+00	"35" 87+00	STRIPING AND SIGNAGE PLAN
28	"35" 87+00	"35" 109+00	STRIPING AND SIGNAGE PLAN
29	"35" 109+00	"35" 131+00	STRIPING AND SIGNAGE PLAN
30	"35" 131+00	"35" 142+00	STRIPING AND SIGNAGE PLAN
31	"O" 4+50	"35" 20+00	STRIPING AND SIGNAGE PLAN

Avoid cutting underground utility lines. It's costly.
Call before you Dig
1-800-227-2600
UNDERGROUND SERVICE (USA)

PROFESSIONAL ENGINEER - STATE OF NEVADA
CLINTON G. THIESSE
Exp. 06-30-16
CIVIL
No. 6159

SUMMIT ENGINEERING CORPORATION
5405 MAE ANNE AVENUE, RENO, NV 89523 PH:(775) 747-8550

DESIGNED BY:
DRAWN BY: jdarrough
CHECKED BY:
Copyright SUMMIT ENG 2016

PLANS FOR I.R.R. PROJECT
P.L.I.R. 35 (1) WADSWORTH BYPASS ROAD
PROJECT PLAN MAP
WADSWORTH WASHOE COUNTY NEVADA

REV.	DATE	DESCRIPTION	BY	APP'D

SCALE
HORIZ: 1"=1200'
VERT:
JOB #: 129209

N:\DWGS\129209_WadsBypassRd\Civil4_WBR_PLANMAP.DWG - 11:34 AM * 29-APR-2016

SHEET 4 OF 64

APPENDIX B

U.S. Fish and Wildlife Correspondence

United States Department of the Interior

FISH AND WILDLIFE SERVICE
Reno Fish and Wildlife Office
1340 FINANCIAL BOULEVARD, SUITE 234
RENO, NV 89502
PHONE: (775)861-6300 FAX: (775)861-6301
URL: www.fws.gov/nevada/

Consultation Code: 08ENVD00-2016-SLI-0310 April 22, 2016
Event Code: 08ENVD00-2016-E-00332
Project Name: Wadsworth Bypass Project

Subject: List of threatened and endangered species that may occur in your proposed project location, and/or may be affected by your proposed project

To Whom It May Concern:

The attached species list indicates threatened, endangered, proposed, and candidate species and designated or proposed critical habitat that may occur within the boundary of your proposed project and/or may be affected by your proposed project. The species list fulfills the requirements of the U.S. Fish and Wildlife Service (Service) under section 7(c) of the Endangered Species Act of 1973, as amended (ESA, 16 U.S.C. 1531 *et seq*.), for projects that are authorized, funded, or carried out by a Federal agency. Candidate species have no protection under the ESA but are included for consideration because they could be listed prior to the completion of your project. Consideration of these species during project planning may assist species conservation efforts and may prevent the need for future listing actions. For additional information regarding species that may be found in the proposed project area, visit http://www.fws.gov/nevada/es/ipac.html.

The purpose of the ESA is to provide a means whereby threatened and endangered species and the ecosystems upon which they depend may be conserved. Under sections 7(a)(1) and 7(a)(2) of the ESA and its implementing regulations (50 CFR 402 *et seq*.), Federal agencies are required to utilize their authorities to carry out programs for the conservation of threatened and endangered species and to determine whether projects may affect threatened and endangered species and/or designated critical habitat.

A Biological Assessment is required for construction projects that are major Federal actions significantly affecting the quality of the human environment as defined in the National Environmental Policy Act (42 U.S.C. 4332(2) (c)). For projects other than major construction activities, the Service suggests that a biological evaluation similar to a Biological Assessment

be prepared to determine whether the project may affect listed or proposed species and/or designated or proposed critical habitat. Guidelines for preparing a Biological Assessment can be found at: http://www.fws.gov/midwest/endangered/section7/ba_guide.html.

If a Federal action agency determines, based on the Biological Assessment or biological evaluation, that listed species and/or designated critical habitat may be affected by the proposed project, the agency is required to consult with the Service pursuant to 50 CFR 402. In addition, the Service recommends that candidate species, proposed species, and proposed critical habitat be addressed within the consultation. More information on the regulations and procedures for section 7 consultation, including the role of permit or license applicants, can be found in the "Endangered Species Consultation Handbook" at: http://www.fws.gov/endangered/esa-library/pdf/TOC-GLOS.PDF.

New information based on updated surveys, changes in the abundance and distribution of species, changed habitat conditions, or other factors could change this species list. Please feel free to contact us if you need more current information or assistance regarding the potential impacts to federally listed, proposed, and candidate species and federally designated and proposed critical habitat. Please note that under 50 CFR 402.12(e) of the regulations implementing section 7 of the ESA, the accuracy of this species list should be verified after 90 days. This verification can be completed formally or informally, as desired. The Service recommends that verification be completed by visiting the ECOS-IPaC website at regular intervals during project planning and implementation, for updates to species lists and information. An updated list may be requested through the ECOS-IPaC system by completing the same process used to receive the attached list.

The Nevada Fish and Wildlife Office (NFWO) no longer provides species of concern lists. Most of these species for which we have concern are also on the Animal and Plant At-Risk Tracking List for Nevada (At-Risk list) maintained by the State of Nevada's Natural Heritage Program (Heritage). Instead of maintaining our own list, we adopted Heritage's At-Risk list and are partnering with them to provide distribution data and information on the conservation needs for at-risk species to agencies or project proponents. The mission of Heritage is to continually evaluate the conservation priorities of native plants, animals, and their habitats, particularly those most vulnerable to extinction or in serious decline. In addition, in order to avoid future conflicts, we ask that you consider these at-risk species early in your project planning and explore management alternatives that provide for their long-term conservation.

For a list of at-risk species by county, visit Heritage's website (http://heritage.nv.gov). For a specific list of at-risk species that may occur in the project area, you can obtain a data request form from the website (http://heritage.nv.gov/get_data) or by contacting the Administrator of Heritage at 901 South Stewart Street, Suite 5002, Carson City, Nevada 89701-5245, (775) 684-2900. Please indicate on the form that your request is being obtained as part of your coordination with the Service under the ESA. During your project analysis, if you obtain new information or data for any Nevada sensitive species, we request that you provide the information to Heritage at the above address.

Furthermore, certain species of fish and wildlife are classified as protected by the State of Nevada (http://www.leg.state.nv.us/NAC/NAC-503.html). You must first obtain the appropriate license, permit, or written authorization from the Nevada Department of Wildlife (NDOW) to

take, or possess any parts of protected fish and wildlife species. Please visit http://www.ndow.org or contact NDOW in northern Nevada (775) 688-1500, in southern Nevada (702) 486-5127, or in eastern Nevada (775) 777-2300.

Please be aware that bald and golden eagles are protected under the Bald and Golden Eagle Protection Act (16 U.S.C. 668 *et seq*.), and projects affecting these species may require development of an eagle conservation plan (http://www.fws.gov/windenergy/eagle_guidance.html). Additionally, wind energy projects should follow the Service's wind energy guidelines (http://www.fws.gov/windenergy/) for minimizing impacts to migratory birds and bats.

The Service's Pacific Southwest Region developed the *Interim Guidelines for the Development of a Project Specific Avian and Bat Protection Plan for Wind Energy Facilities* (Interim Guidelines). This document provides energy facility developers with a tool for assessing the risk of potential impacts to wildlife resources and delineates how best to design and operate a bird- and bat-friendly wind facility. These Interim Guidelines are available upon request from the NFWO. The intent of a Bird and Bat Conservation Strategy is to conserve wildlife resources while supporting project developers through: (1) establishing project development in an adaptive management framework; (2) identifying proper siting and project design strategies; (3) designing and implementing pre-construction surveys; (4) implementing appropriate conservation measures for each development phase; (5) designing and implementing appropriate post-construction monitoring strategies; (6) using post-construction studies to better understand the dynamics of mortality reduction (*e.g.*, changes in blade cut-in speed, assessments of blade “feathering” success, and studies on the effects of visual and acoustic deterrents) including efforts tied into Before-After/Control-Impact analysis; and (7) conducting a thorough risk assessment and validation leading to adjustments in management and mitigation actions.

The template and recommendations set forth in the Interim Guidelines were based upon the Avian Powerline Interaction Committee's Avian Protection Plan template (http://www.aplic.org/) developed for electric utilities and modified accordingly to address the unique concerns of wind energy facilities. These recommendations are also consistent with the Service's wind energy guidelines. We recommend contacting us as early as possible in the planning process to discuss the need and process for developing a site-specific Bird and Bat Conservation Strategy.

The Service has also developed guidance regarding wind power development in relation to prairie grouse leks (sage-grouse are included in this). This document can be found at: http://www.fws.gov/southwest/es/Oklahoma/documents/te_species/wind%20power/prairie%20gr
.

Migratory Birds are a Service Trust Resource. Based on the Service's conservation responsibilities and management authority for migratory birds under the Migratory Bird Treaty Act of 1918, as amended (MBTA; 16 U.S.C. 703 *et seq*.), we recommend that any land clearing or other surface disturbance associated with proposed actions within the project area be timed to avoid potential destruction of bird nests or young, or birds that breed in the area. Such destruction may be in violation of the MBTA. Under the MBTA, nests with eggs or young of migratory birds may not be harmed, nor may migratory birds be killed. Therefore, we recommend land clearing be conducted outside the avian breeding season. If this is not feasible,

we recommend a qualified biologist survey the area prior to land clearing. If nests are located, or if other evidence of nesting (*i.e.*, mated pairs, territorial defense, carrying nesting material, transporting food) is observed, a protective buffer (the size depending on the habitat requirements of the species) should be delineated and the entire area avoided to prevent destruction or disturbance to nests until they are no longer active.

Guidance for minimizing impacts to migratory birds for projects involving communications towers (*e.g.*, cellular, digital television, radio, and emergency broadcast) can be found at: http://www.fws.gov/migratorybirds/CurrentBirdIssues/Hazards/towers/towers.htm; http://www.towerkill.com; and http://www.fws.gov/migratorybirds/CurrentBirdIssues/Hazards/towers/comtow.html.

If wetlands, springs, or streams are are known to occur in the project area or are present in the vicinity of the project area, we ask that you be aware of potential impacts project activities may have on these habitats. Discharge of fill material into wetlands or waters of the United States is regulated by the U.S. Army Corps of Engineers (ACOE) pursuant to section 404 of the Clean Water Act of 1972, as amended. We recommend you contact the ACOE's Regulatory Section regarding the possible need for a permit. For projects located in northern Nevada (Carson City, Churchill, Douglas, Elko, Esmeralda, Eureka, Humboldt, Lander, Lyon, Mineral, Pershing, Storey, and Washoe Counties) contact the Reno Regulatory Office at 300 Booth Street, Room 3060, Reno, Nevada 89509, (775) 784-5304; in southern Nevada (Clark, Lincoln, Nye, and White Pine Counties) contact the St. George Regulatory Office at 321 North Mall Drive, Suite L-101, St. George, Utah 84790-7314, (435) 986-3979; or in California along the eastern Sierra contact the Sacramento Regulatory Office at 650 Capitol Mall, Suite 5-200, Sacramento, California 95814, (916) 557-5250.

We appreciate your concern for threatened and endangered species. Please include the Consultation Tracking Number in the header of this letter with any request for consultation or correspondence about your project that you submit to our office.

The table below outlines lead FWS field offices by county and land ownership/project type. Please refer to this table when you are ready to coordinate (including requests for section 7 consultation) with the field office corresponding to your project, and send any documentation regarding your project to that corresponding office. Therefore, the lead FWS field office may not be the office listed above in the letterhead.

Lead FWS offices by County and Ownership/Program

County	Ownership/Program	Species	Office Lead*
Alameda	Tidal wetlands/marsh adjacent to Bays	Salt marsh species, delta smelt	BDFWO
Alameda	All ownerships but tidal/estuarine	All	SFWO

Alpine	Humboldt Toiyabe National Forest	All	RFWO
Alpine	Lake Tahoe Basin Management Unit	All	RFWO
Alpine	Stanislaus National Forest	All	SFWO
Alpine	El Dorado National Forest	All	SFWO
Colusa	Mendocino National Forest	All	AFWO
Colusa	Other	All	By jurisdiction (see map)
Contra Costa	Legal Delta (Excluding ECCHCP)	All	BDFWO
Contra Costa	Antioch Dunes NWR	All	BDFWO
Contra Costa	Tidal wetlands/marsh adjacent to Bays	Salt marsh species, delta smelt	BDFWO
Contra Costa	All ownerships but tidal/estuarine	All	SFWO
Del Norte	All	All	AFWO
El Dorado	El Dorado National Forest	All	SFWO
El Dorado	LakeTahoe Basin Management Unit		RFWO
Glenn	Mendocino National Forest	All	AFWO

Glenn	Other	All	By jurisdiction (see map)
Humboldt	All except Shasta Trinity National Forest	All	AFWO
Humboldt	Shasta Trinity National Forest	All	YFWO
Lake	Mendocino National Forest	All	AFWO
Lake	Other	All	By jurisdiction (see map)
Lassen	Modoc National Forest	All	KFWO
Lassen	Lassen National Forest	All	SFWO
Lassen	Toiyabe National Forest	All	RFWO
Lassen	BLM Surprise and Eagle Lake Resource Areas	All	RFWO
Lassen	BLM Alturas Resource Area	All	KFWO
Lassen	Lassen Volcanic National Park	All (includes Eagle Lake trout on all ownerships)	SFWO
Lassen	All other ownerships	All	By jurisdiction (see map)
Marin	Tidal wetlands/marsh adjacent to	Salt marsh species, delta	BDFWO

	Bays	smelt	
Marin	All ownerships but tidal/estuarine	All	SFWO
Mendocino	Russian River watershed	All	SFWO
Mendocino	All except Russian River watershed	All	AFWO
Modoc	Modoc National Forest	All	KFWO
Modoc	BLM Alturas Resource Area	All	KFWO
Modoc	Klamath Basin National Wildlife Refuge Complex	All	KFWO
Modoc	BLM Surprise and Eagle Lake Resource Areas	All	RFWO
Modoc	All other ownerships	All	By jurisdiction (See map)
Mono	Inyo National Forest	All	RFWO
Mono	Humboldt Toiyabe National Forest	All	RFWO
Napa	All ownerships but tidal/estuarine	All	SFWO
Napa	Tidal wetlands/marsh adjacent to San Pablo Bay	Salt marsh species, delta smelt	BDFWO
Nevada	Humboldt Toiyabe National Forest	All	RFWO

Nevada	All other ownerships	All	By jurisdiction (See map)
Placer	Lake Tahoe Basin Management Unit	All	RFWO
Placer	All other ownerships	All	SFWO
Sacramento	Legal Delta	Delta Smelt	BDFWO
Sacramento	Other	All	By jurisdiction (see map)
San Francisco	Tidal wetlands/marsh adjacent to San Francisco Bay	Salt marsh species, delta smelt	BDFWO
San Francisco	All ownerships but tidal/estuarine	All	SFWO
San Mateo	Tidal wetlands/marsh adjacent to San Francisco Bay	Salt marsh species, delta smelt	BDFWO
San Mateo	All ownerships but tidal/estuarine	All	SFWO
San Joaquin	Legal Delta excluding San Joaquin HCP	All	BDFWO
San Joaquin	Other	All	SFWO
Santa Clara	Tidal wetlands/marsh adjacent to San Francisco Bay	Salt marsh species, delta smelt	BDFWO
Santa Clara	All ownerships but tidal/estuarine	All	SFWO

Shasta	Shasta Trinity National Forest except Hat Creek Ranger District (administered by Lassen National Forest)	All	YFWO
Shasta	Hat Creek Ranger District	All	SFWO
Shasta	Bureau of Reclamation (Central Valley Project)	All	BDFWO
Shasta	Whiskeytown National Recreation Area	All	YFWO
Shasta	BLM Alturas Resource Area	All	KFWO
Shasta	Caltrans	By jurisdiction	SFWO/AFWO
Shasta	Ahjumawi Lava Springs State Park	Shasta crayfish	SFWO
Shasta	All other ownerships	All	By jurisdiction (see map)
Shasta	Natural Resource Damage Assessment, all lands	All	SFWO/BDFWO
Sierra	Humboldt Toiyabe National Forest	All	RFWO
Sierra	All other ownerships	All	SFWO
Siskiyou	Klamath National Forest (except Ukonom District)	All	YFWO
	Six Rivers National Forest and		

Siskiyou	Ukonom District	All	AFWO
Siskiyou	Shasta Trinity National Forest	All	YFWO
Siskiyou	Lassen National Forest	All	SFWO
Siskiyou	Modoc National Forest	All	KFWO
Siskiyou	Lava Beds National Volcanic Monument	All	KFWO
Siskiyou	BLM Alturas Resource Area	All	KFWO
Siskiyou	Klamath Basin National Wildlife Refuge Complex	All	KFWO
Siskiyou	All other ownerships	All	By jurisdiction (see map)
Solano	Suisun Marsh	All	BDFWO
Solano	Tidal wetlands/marsh adjacent to San Pablo Bay	Salt marsh species, delta smelt	BDFWO
Solano	All ownerships but tidal/estuarine	All	SFWO
Solano	Other	All	By jurisdiction (see map)
Sonoma	Tidal wetlands/marsh adjacent to San Pablo Bay	Salt marsh species, delta smelt	BDFWO

Sonoma	All ownerships but tidal/estuarine	All	SFWO
Tehama	Mendocino National Forest	All	AFWO
Tehama	Shasta Trinity National Forest except Hat Creek Ranger District (administered by Lassen National Forest)	All	YFWO
Tehama	All other ownerships	All	By jurisdiction (see map)
Trinity	BLM	All	AFWO
Trinity	Six Rivers National Forest	All	AFWO
Trinity	Shasta Trinity National Forest	All	YFWO
Trinity	Mendocino National Forest	All	AFWO
Trinity	BIA (Tribal Trust Lands)	All	AFWO
Trinity	County Government	All	AFWO
Trinity	All other ownerships	All	By jurisdiction (See map)
Yolo	Yolo Bypass	All	BDFWO
Yolo	Other	All	By jurisdiction (see map)
All	FERC-ESA	All	By jurisdiction (see map)

All	FERC-ESA	Shasta crayfish	SFWO
All	FERC-Relicensing (non-ESA)	All	BDFWO
***Office Leads:**			
AFWO=Arcata Fish and Wildlife Office			
BDFWO=Bay Delta Fish and Wildlife Office			
KFWO=Klamath Falls Fish and Wildlife Office			
RFWO=Reno Fish and Wildlife Office			
YFWO=Yreka Fish and Wildlife Office			

Attachment

United States Department of Interior
Fish and Wildlife Service

Project name: Wadsworth Bypass Project

Official Species List

Provided by:

Reno Fish and Wildlife Office
1340 FINANCIAL BOULEVARD, SUITE 234
RENO, NV 89502
(775) 861-6300
http://www.fws.gov/nevada/

Consultation Code: 08ENVD00-2016-SLI-0310
Event Code: 08ENVD00-2016-E-00332

Project Type: TRANSPORTATION

Project Name: Wadsworth Bypass Project
Project Description: Project consists of new road construction of a bypass around the Wadsworth community.

Please Note: The FWS office may have modified the Project Name and/or Project Description, so it may be different from what was submitted in your previous request. If the Consultation Code matches, the FWS considers this to be the same project. Contact the office in the 'Provided by' section of your previous Official Species list if you have any questions or concerns.

Project Location Map:

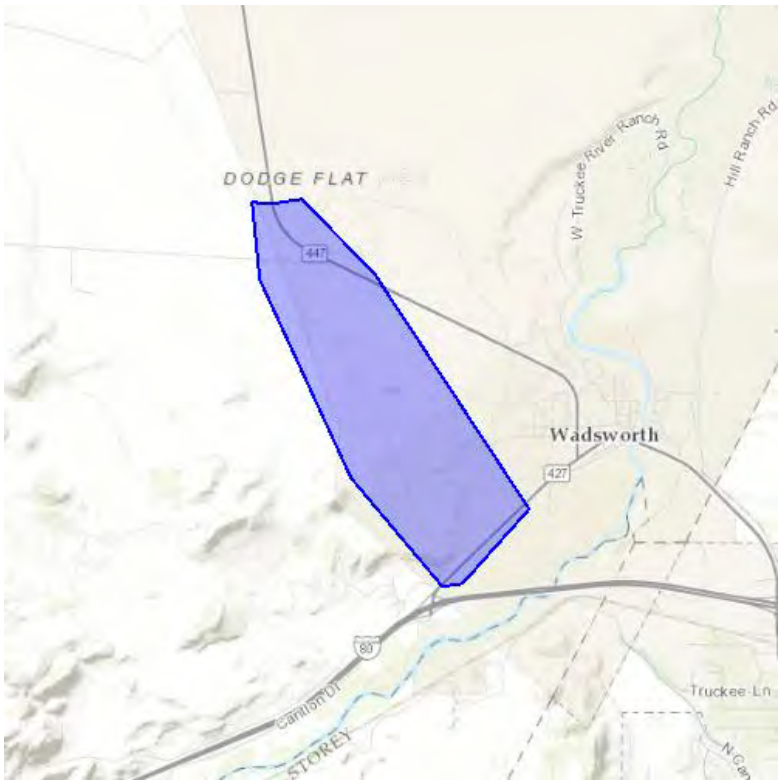

Project Coordinates: MULTIPOLYGON (((-119.32920455932617 39.6552666025506, -119.33169364929198 39.65533268339743, -119.33066368103027 39.647865147953304, -119.31924819946288 39.62849866613356, -119.30766105651855 39.61805305690691, -119.30517196655273 39.61838363831915, -119.29658889770508 39.625589920702964, -119.31615829467773 39.64852602433091, -119.3254280090332 39.65572916715185, -119.32920455932617 39.6552666025506)))

Project Counties: Washoe, NV

Endangered Species Act Species List

There are a total of 2 threatened or endangered species on your species list. Species on this list should be considered in an effects analysis for your project and could include species that exist in another geographic area. For example, certain fish may appear on the species list because a project could affect downstream species. Critical habitats listed under the **Has Critical Habitat** column may or may not lie within your project area. See the **Critical habitats within your project area** section further below for critical habitat that lies within your project. Please contact the designated FWS office if you have questions.

Fishes	Status	Has Critical Habitat	Condition(s)
cui-ui *(Chasmistes cujus)* Population: Entire	Endangered		
Lahontan cutthroat trout *(Oncorhynchus clarkii henshawi)* Population: Entire	Threatened		

Critical habitats that lie within your project area

There are no critical habitats within your project area.

United States Department of Interior
Fish and Wildlife Service

Project name: Wadsworth Bypass Project

Appendix A: FWS National Wildlife Refuges and Fish Hatcheries

There are no refuges or fish hatcheries within your project area.

United States Department of Interior
Fish and Wildlife Service

Project name: Wadsworth Bypass Project

Appendix B: FWS Migratory Birds

The protection of birds is regulated by the Migratory Bird Treaty Act (MBTA) and the Bald and Golden Eagle Protection Act (BGEPA). Any activity, intentional or unintentional, resulting in take of migratory birds, including eagles, is prohibited unless otherwise permitted by the U.S. Fish and Wildlife Service (50 C.F.R. Sec. 10.12 and 16 U.S.C. Sec. 668(a)). The MBTA has no otherwise lawful activities. For more information regarding these Acts see:
http://www.fws.gov/birds/policies-and-regulations/laws-legislations/migratory-bird-treaty-act.php
http://www.fws.gov/birds/policies-and-regulations/laws-legislations/bald-and-golden-eagle-protection-act.php

All project proponents are responsible for complying with the appropriate regulations protecting birds when planning and developing a project. To meet these conservation obligations, proponents should identify potential or existing project-related impacts to migratory birds and their habitat and develop and implement conservation measures that avoid, minimize, or compensate for these impacts. The Service's Birds of Conservation Concern (2008) report identifies species, subspecies, and populations of all migratory nongame birds that, without additional conservation actions, are likely to become listed under the Endangered Species Act as amended (16 U.S.C 1531 et seq.).

For information about Birds of Conservation Concern, go to:
http://www.fws.gov/birds/management/managed-species/birds-of-conservation-concern.php

For information about conservation measures that help avoid or minimize impacts to birds, please visit:
http://www.fws.gov/birds/management/project-assessment-tools-and-guidance/conservation-measures.php

To search and view summaries of year-round bird occurrence data within your project area, go to the Avian Knowledge Network Histogram Tools at:
http://www.fws.gov/birds/management/project-assessment-tools-and-guidance/akn-histogram-tools.php

Migratory birds of concern that may be affected by your project:
There are 22 birds on your Migratory birds of concern list.

Species Name	Bird of Conservation Concern (BCC)	Seasonal Occurrence in Project Area
Bald eagle *(Haliaeetus leucocephalus)*	Yes	Wintering

Black Rosy-Finch *(Leucosticte atrata)*	Yes	Year-round
Brewer's Sparrow *(Spizella breweri)*	Yes	Breeding
Burrowing Owl *(Athene cunicularia)*	Yes	Breeding
Calliope Hummingbird *(Stellula calliope)*	Yes	Breeding
Eared Grebe *(Podiceps nigricollis)*	Yes	Breeding
Fox Sparrow *(Passerella liaca)*	Yes	Breeding
Greater sage-grouse *(Centrocercus urophasianus)*	Yes	Year-round
Green-tailed Towhee *(Pipilo chlorurus)*	Yes	Breeding
Loggerhead Shrike *(Lanius ludovicianus)*	Yes	Year-round
Long-Billed curlew *(Numenius americanus)*	Yes	Breeding
Olive-Sided flycatcher *(Contopus cooperi)*	Yes	Breeding
Peregrine Falcon *(Falco peregrinus)*	Yes	Year-round
Pinyon Jay *(Gymnorhinus cyanocephalus)*	Yes	Year-round
Sage Thrasher *(Oreoscoptes*	Yes	Breeding

montanus)		
Short-eared Owl *(Asio flammeus)*	Yes	Year-round
Snowy Plover *(Charadrius alexandrinus)*	Yes	Breeding
Swainson's hawk *(Buteo swainsoni)*	Yes	Breeding
tricolored blackbird *(Agelaius tricolor)*	Yes	Breeding
Western grebe *(aechmophorus occidentalis)*	Yes	Breeding
White-headed Woodpecker *(Picoides albolarvatus)*	Yes	Year-round
Williamson's Sapsucker *(Sphyrapicus thyroideus)*	Yes	Year-round

United States Department of Interior
Fish and Wildlife Service

Project name: Wadsworth Bypass Project

Appendix C: NWI Wetlands

There are no wetlands within your project area.

APPENDIX C

Tribal Historic Preservation Officer Concurrence Documentation

Chip Lund

Pyramid Lake Paiute Tribe

Post Office Box 256
Nixon, Nevada 89424
Telephone: (775) 574-1000 / 574-1001 / 574-1002
FAX (775) 574-1008

RECEIVED

APR 21 2014

2014 APR 24 P 4: 28

BIA-WRO
DIVISION OF
TRANSPORTATION

Daniel R. Smith
Regional Roads Engineer
Bureau of Indian Affairs
Western Region
Division of Transportation
2600 N. Central Avenue
Phoenix, Arizona 85004

Re: Wadsworth Road Bypass Project (PLIR 35(1)) on the Pyramid Lake Indian Reservation, NV

Dear Mr. Smith:

The Pyramid Lake Paiute Tribe Tribal Historic Preservation Office has reviewed the subject undertaking in compliance with Section 106 of the National Historic Preservation Act (NHPA) of 1966, as amended. A Class III archeological inventory was conducted by Kautz Environmental Consultants in the area of potential affect pursuant to Section 106 of the NHPA and resulted in ten archaeological sites being identified, of which, eight were not recommended eligible for nomination to the National Register. However, two sites, 26Wp9386 and 26Wp9388 (historic ditch segments) are eligible for the National Register but are unavoidable by the project as planned.

The BIA determined that historic properties 26Wp9386 and 26Wp9388, are eligible for the National Register for Historic Places under the Secretary's criterion A; however, the BIA made findings of "No Adverse Effect," concerning those properties. Additionally, the BIA determined the remaining sites are not eligible for the National Register.

The THPO concurs with the Bureau of Indian Affairs' determination of No Adverse Effect is appropriate concerning sites, 26Wp9386 and 26Wp9388 and that the remaining sites are not eligible for the National Register.

During the project activities, including ground disturbances and the like, the THPO requests if any buried and previously unidentified resources are located that all work in the vicinity of the find cease and this office be contacted and that the on-site PLPT monitor be allowed to inspect and consult. In addition, the THPO further request if human remains and associated funerary objects are uncovered, that all work cease and the THPO be notified and the on-site PLPT monitor be allowed to inspect and consult.

If you have any questions concerning this correspondence, please call Betty Aleck at 775-574-1088 or 775-345-5625 or by email at thpo@plpt.nsn.us

Sincerely,

Betty J. Aleck

Betty Aleck
PLPT THPO

Cc: Elwood Lowery, PLPT Chairman
Johnny Garcia, PLPT Roads Director
Cultural Resources Committee

APPENDIX D

Natural Resources Conservation Service Correspondence

United States Department of Agriculture

NRCS Natural Resources Conservation Service

Minden Soil Survey Office
1702 Country Rd. Ste. A1
Minden, Nevada 89423
(775) 782-3661
Fax: 782-2547

February 15, 2012
File code: 310-11-12

SUBJECT: Wadsworth Bypass Road Project– FPPA Evaluation

RECEIVED
FEB 22 2012
JBR ENVIRONMENTAL

TO: George Dix
Environmental Analyst
JBR Environmental Consultants, Inc.
595 Double Eagle Ct., Ste. 2000
Reno, Nevada 89521

The Wadsworth Bypass Road Project in Washoe County, Nevada was reviewed for potential impacts on Prime or Unique Farmland. Based on a site visit, review of soil map units affected by the undertaking, and information provided by JBR Environmental it was determined there are impacts to Prime or Unique Farmland within the portion of this project reviewed by the Natural Resources Conservation Service(NRCS). Attached you will find a completed Farmland Conversion Impact Rating Form.

Stephen C. Herriman

Stephen C. Herriman
Natural Resources Conservation Service
Soil Scientist
1702 County Road, Suite A1
Minden, NV 89423
775-782-3661 ext. 109

Enclosed: Form AD-1006

The Natural Resources Conservation Service provides leadership in a partnership effort to help people conserve, maintain, and improve our natural resources and environment.

An Equal Opportunity Provider and Employer

U.S. Department of Agriculture

FARMLAND CONVERSION IMPACT RATING

PART I *(To be completed by Federal Agency)*	Date Of Land Evaluation Request 2/6/12
Name Of Project PLIR35(1) Wadsworth Bypass Rd. Proj. H6169400	Federal Agency Involved BIA Western Regional Office and FHWA
Proposed Land Use New 2-Lane, Asphalt-Surface Public Road	County And State Pyramid Lake Indian Reservation, Washoe Co., NV
PART II *(To be completed by NRCS)*	Date Request Received By NRCS 2/10/12

Does the site contain prime, unique, statewide or local important farmland? *(If no, the FPPA does not apply -- do not complete additional parts of this form).*	Yes ☑	No ☐	Acres Irrigated 3.2	Average Farm Size 1,236 ac
Major Crop(s) Alfalfa	Farmable Land In Govt. Jurisdiction Acres: 300,000 % 3		Amount Of Farmland As Defined in FPPA Acres: 10,000 % 3	
Name Of Land Evaluation System Used Standard	Name Of Local Site Assessment System Standard		Date Land Evaluation Returned By NRCS 2/16/12	

PART III *(To be completed by Federal Agency)*	Alternative Site Rating			
	Site A	Site B	Site C	Site D
A. Total Acres To Be Converted Directly	3.2			
B. Total Acres To Be Converted Indirectly	0.0			
C. Total Acres In Site	3.2	0.0	0.0	0.0
PART IV *(To be completed by NRCS)* Land Evaluation Information				
A. Total Acres Prime And Unique Farmland	3.2			
B. Total Acres Statewide And Local Important Farmland	3.2			
C. Percentage Of Farmland In County Or Local Govt. Unit To Be Converted	0.1			
D. Percentage Of Farmland In Govt. Jurisdiction With Same Or Higher Relative Value	30.0			
PART V *(To be completed by NRCS)* Land Evaluation Criterion Relative Value Of Farmland To Be Converted *(Scale of 0 to 100 Points)*	60	0	0	0

PART VI *(To be completed by Federal Agency)* Site Assessment Criteria *(These criteria are explained in 7 CFR 658.5(b)*	Maximum Points				
1. Area In Nonurban Use	15	15			
2. Perimeter In Nonurban Use	10	10			
3. Percent Of Site Being Farmed	20	5			
4. Protection Provided By State And Local Government	20	20			
5. Distance From Urban Builtup Area					
6. Distance To Urban Support Services					
7. Size Of Present Farm Unit Compared To Average	10	2			
8. Creation Of Nonfarmable Farmland	25	0			
9. Availability Of Farm Support Services	5	5			
10. On-Farm Investments	20	15			
11. Effects Of Conversion On Farm Support Services	25	0			
12. Compatibility With Existing Agricultural Use	10	5			
TOTAL SITE ASSESSMENT POINTS	160	77	0	0	0
PART VII *(To be completed by Federal Agency)*					
Relative Value Of Farmland *(From Part V)*	100	60	0	0	0
Total Site Assessment *(From Part VI above or a local site assessment)*	160	77	0	0	0
TOTAL POINTS *(Total of above 2 lines)*	260	137	0	0	0

Site Selected:	Date Of Selection	Was A Local Site Assessment Used? Yes ☐ No ☒

Reason For Selection:

(See Instructions on reverse side)

This form was electronically produced by National Production Services Staff

Form AD-1006 (10-83)

APPENDIX E

Biological Review

BIOLOGICAL REVIEW

PLIR 35(1)
Wadsworth Bypass Road Project
Project No. H6169400
Pyramid Lake Indian Reservation
Washoe County, Nevada

Prepared for:

Bureau of Indian Affairs
Western Regional Office – Division of Transportation
Phoenix, Arizona

Prepared by:

Stantec Consulting Services Inc.
6995 Sierra Center Parkway
Reno, Nevada 89511

May 2016

Table of Contents

1.0 PROJECT LOCATION 1

2.0 PROJECT DESCRIPTION 1

3.0 PROJECT AREA 1

4.0 FEDERALLY LISTED SPECIES EVALUATED 2
4.1 LAHONTAN CUTTHROAT TROUT 2
4.2 CUI-UI 3

5.0 FINDING 3

6.0 REFERENCES 4

7.0 SIGNATURE 5

FIGURES

Figure 1 Project Location Map
Figure 2 Proposed Project Area

1.0 PROJECT LOCATION

Pyramid Lake Indian Route 35(1), also known as the Wadsworth Bypass Road Project (proposed project) would occur entirely on the Pyramid Lake Indian Reservation (Reservation), west of the community of Wadsworth, Nevada (Figures 1 and 2).

2.0 PROJECT DESCRIPTION

The proposed bypass road would be approximately 2.7 miles long, and include a two-lane asphalt travel surface and associated shoulders and embankments.

3.0 PROJECT AREA

Topography within the project area consists primarily of flat to gently sloping terrain. Isolated steep slopes are found within the project area where the high terrace and former floodplain converge. These isolated steep slopes are the dominant topographic element within the boundaries of the project area. Tall peaks and ridges in the Pah Rah Range and Black Mountains, located west and east of the project area respectively, are the dominant topographic elements visible from the project area (Figures 1 and 2).

The majority of the project area is located on a high terrace that was once a part of the floodplain of the Truckee River. However, downcutting resulting from channelization and straightening as part of an upstream flood control project combined with several major flood events, disconnected this former floodplain area from the Truckee River.

The Inter-Mountain Basins Mixed Salt Desert Scrub land cover type is the predominant land cover type within the project area. The dominant species within the project area are Bailey's greasewood (*Sarcobatus baileyi*) and Nevada dalea (*Psorothamnus polydenius*). Shadscale saltbush (*Atriplex confertifolia*), spiny hopsage (*Grayia spinosa*), and rubber rabbitbrush (*Ericameria nauseosa*) were a common component of the species composition as well. Smooth horsebrush (*Tetradymia glabrata*) and winterfat (*Krascheninnikovia lanata*) were less common but consistently present across the entire vegetation community. Big sagebrush (*Artemisia tridentata*) individuals occur irregularly and infrequently. The herbaceous layer was sparse, and absent in many locations. Where present, the invasive species cheatgrass (*Bromus tectorum*) was generally dominant. The herbaceous layer also included Indian ricegrass (*Achnatherum hymenoides*) and yellow beeplant (*Cleome lutea*). The southern end of the project area has been converted to agriculture fields that have been traditionally planted with alfalfa.

4.0 FEDERALLY LISTED SPECIES EVALUATED

These two species were identified by the USFWS Nevada Office as potentially occurring within the project area.

- Lahontan cutthroat trout (LCT) (Threatened); and
- Cui-ui (Endangered)

4.1 LAHONTAN CUTTHROAT TROUT

The LCT was listed as an endangered species in 1970. In 1975, the LCT was reclassified as threatened to facilitate management and to allow for regulated angling. In 1995, USFWS released its recovery plan for LCT, encompassing six river basins within LCT historic range, including the Truckee River basin. Critical habitat has not been designated for LCT. Threats to LCT include habitat loss, livestock grazing, urban development, mining, water diversion, poor water quality, and hybridization and competition with non-native salmonids (USFWS 1995).

LCT were once the only trout (with one exception) found on the east side of the Sierra Nevada, residing in a variety of cold water, from large terminal desert lakes to small mountain lakes, from major rivers to small headwater creeks (Moyle 2002). Historically, LCT was endemic to the physiographic Lahontan basin of northern Nevada, eastern California, and southern Oregon (USFWS 1995). Today, the current distribution is a fraction of the historic distribution. Some of the formerly occupied streams or lakes have had reintroductions of LCT. Only a handful of sites represent endemic populations. A variety of factors have led to the decline of LCT. A primary factor has been the introduction of non-native fish species, including other trout, which prey on LCT, but also hybridize with LCT. The 1995 Recovery Plan specified four additional conditions contributing to decline and affecting the potential for recovery of LCT in the Truckee River basin: 1) reduction and alteration of stream flow and discharge; 2) alteration of stream channels and morphology; 3) degradation of water quality; and 4) reduction of Pyramid Lake elevation and concentration of chemical components.

Optimal habitat for LCT is characterized by clear cold water and relatively stable summer water temperatures, although LCT are known for their ability to withstand relatively warm summer water temperatures of up to 72 degrees Fahrenheit. LCT are obligatory stream spawners and spawn from April to July, with eggs being deposited in one-fourth to one half inch gravels within riffles, pocket water, or pool crests (USFWS 1995). Cover is an important habitat component with approximately 25 percent of the stream area providing cover. LCT occupies areas with overhanging banks, vegetation, or woody debris, and within stream cover (e.g., brush, aquatic vegetation, and rocks). Additionally, these habitat components are very important for juvenile survival.

4.2 CUI-UI

The cui-ui is federally listed as endangered and is endemic to Pyramid Lake, Nevada within the Pyramid Lake Indian Reservation (USFWS 2012). They spawn upstream of the lake in gravel beds of the lower Truckee River. In the 1970's Marble Bluff Dam was constructed primarily to halt channel incision of the Truckee River; however, the dam is located about three miles upstream from Pyramid Lake. For the cui-ui to reach spawning habitat they must migrate through a constructed fish passageway. A number of attempts by fisheries biologist to enhance the passage for the fish to reach the spawning beds of the Truckee River has had limited success (Scoppettone et al. 2013) and Cui-ui have been documented migrating relatively short distances (greater than two kilometers) above the dam (Scoppettone 1986; Scoppettone et al. 2013). Threats to the fish are river diversions, dams, sedimentation and impairment of water quality.

5.0 FINDING

Fish population levels and survival have been linked to levels of turbidity and siltation in a watershed. Construction of the proposed road would include earth moving activities. Typical short-term construction-related impacts that may pose threats to Lahontan cutthroat trout and cui-ui are increased sediments and turbidity from earth moving activities.

The project area is outside of the 100-year floodplain of the Truckee River and therefore, the proposed project would have no direct effects to habitat for Lahontan cutthroat trout or cui-ui. The project would have no indirect effects to habitat from increased turbidity and siltation. Erosion-control measures and reclamation would be implemented to avoid and minimize erosion of soils from the project area. It is possible that some erosion might occur from storm events during the interim period before disturbed areas develop an erosion-resistant crust or until reclamation vegetation provides adequate ground cover. However, the project area is located between 0.5 and 1.1 miles from the Truckee River. Due to the distance from the project area to the Truckee River, effects, if any, would be negligible (not be measurable).

Based on the above analysis, the proposed project would have no effect to Lahontan cutthroat trout or cui-ui or to their habitat.

6.0 REFERENCES

Moyle, P.B. 2002. Inland Fishes of California. Revised and Expanded. University of California Press, Berkeley, California. 446 pp.

Scoppettone, G. 1986. Life History and Status of the Endangered Cui-ui of Pyramid Lake, Nevada. Department of Interior, Fish and Wildlife Service. Washington, D.C.

Scoppettone, G.G., Rissler, P.H., Salgado, J.S., and Harry, Beverly, 2013, Habitat quality and recruitment success of cui-ui in the Truckee River downstream of Marble Bluff Dam, Pyramid Lake, Nevada: U.S. Geological Survey Open-File Report 2013-1247, 22 p. , http://pubs.usgs.gov/of/2013/1247/.

United States Fish and Wildlife Service (USFWS). 1995. Recovery Plan for the Lahontan Cutthroat Trout. United States Fish and Wildlife Service, Portland, Oregon. 108 pp.

United States Fish and Wildlife Service (USFWS). 2012. Life History of Cui-ui. Nevada Fish and Wildlife Service Office. Nevada Protected Species Webpage. September 2012. Accessed online January 22, 2014. http://www.fws.gov/nevada/protected_species/fish/species/cuiui.html.

7.0 SIGNATURE

Prepared by: David Worley Date: Oct 22, 2016

Dave Worley
Wildlife Biologist

FIGURES

BASE MAP: COMPOSITE USGS 7.5 MINUTE QUADRANGLE

PROJECT AREA

COUNTY LINE

PYRAMID LAKE INDIAN RESERVATION

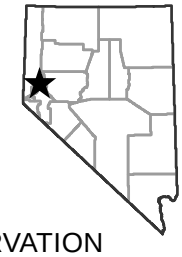

N

0 2 4 8 MILES

ENVIRONMENTAL ASSESSMENT
PLIR 35 (1)
WADSWORTH BYPASS ROAD PROJECT

FIGURE 1
PROJECT LOCATION MAP

BUREAU OF INDIAN AFFAIRS
WESTERN REGIONAL OFFICE
DIVISION OF TRANSPORTATION
2600 N. CENTRAL AVE., STE 150, FLOOR 13
PHOENIX, AZ 85004

DATE DRAWN
APRIL 22, 2016

SCALE
1" = 4 MILES

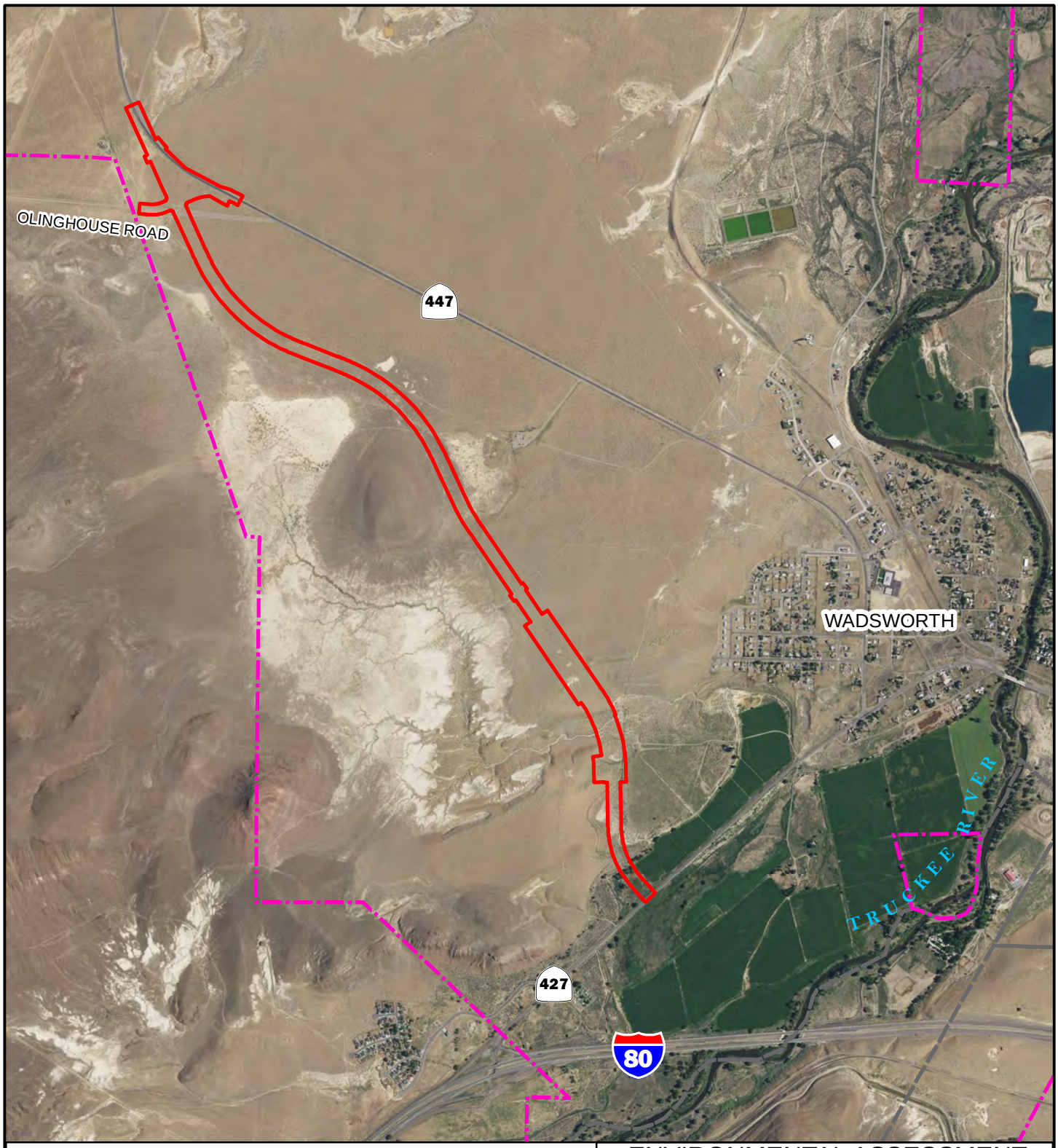

BASE MAP: 2015 NAIP IMAGERY

PROJECT AREA

PYRAMID LAKE INDIAN RESERVATION BOUNDARY

N

0 1,000 2,000 4,000 FEET

ENVIRONMENTAL ASSESSMENT PLIR 35 (1) WADSWORTH BYPASS ROAD PROJECT

FIGURE 2 PROPOSED PROJECT AREA

BUREAU OF INDIAN AFFAIRS
WESTERN REGIONAL OFFICE
DIVISION OF TRANSPORTATION
2600 N. CENTRAL AVE., STE 150, FLOOR 13
PHOENIX, AZ 85004

DATE DRAWN: APRIL 22, 2016

SCALE: 1" = 2,000 FEET