BLM

U.S. Department of the Interior
Bureau of Land Management

VALLEY ELECTRIC ASSOCIATION
BEATTY TO TOLICHA PEAK
DOUBLE CIRCUIT 24.9-kV DISTRIBUTION LINE PROJECT
NYE COUNTY, NEVADA
Case Files: N-88360, N-88568, and Nev 066289

ENVIRONMENTAL ASSESSMENT

DOI-BLM-NV-B020-2013-0063-EA

AUGUST 2013

U.S. Department of the Interior
Bureau of Land Management
Battle Mountain District Office
Tonopah Field Office
Phone: (775) 482-7800
Fax: (775) 482-7810

It is the mission of the Bureau of Land Management to sustain the health, diversity, and productivity of the public lands for the use and enjoyment of present and future generations.

DOI-BLM-NV-B020-2013-0063-EA

VALLEY ELECTRIC ASSOCIATION
BEATTY TO TOLICHA PEAK
DOUBLE CIRCUIT 24.9-kV DISTRIBUTION LINE PROJECT
NYE COUNTY, NEVADA
Case Files: N-88360, N-88568, and Nev 066289

ENVIRONMENTAL ASSESSMENT

TABLE OF CONTENTS

Page

1 INTRODUCTION 1-1
1.1 Background 1-1
1.1.1 Project Description 1-3
1.1.2 Summary of Proposed Action 1-3
1.2 Purpose for the Proposed Action 1-4
1.3 Need for the Proposed Action 1-4
1.4 Decision to be Made 1-4
1.5 Relationship to Planning and Conformance with Land Use Plans 1-4
1.6 Other Applicable Statutes, Regulations, Policies, Plans, and Environmental Analyses 1-5
1.6.1 Federal Land Policy and Management Act of 1976 1-5
1.6.2 Title 43 CFR 2800 1-5
1.6.3 Nye County Comprehensive Master Plan 1-5
1.6.4 Existing NEPA Documentation 1-5
1.6.5 Scoping and Identification of Issues 1-6
2 PROPOSED ACTION AND ALTERNATIVES 2-1
2.1 Proposed Action 2-1
2.1.1 Overview 2-1
2.1.2 Project Disturbance 2-1
2.1.3 Project Location 2-2
2.1.4 Right-of-Way Description 2-3
2.1.5 Facility Design Factors 2-3
2.1.6 Access and Maintenance Roads 2-10
2.1.7 Structure Site and Laydown Areas 2-12
2.1.8 Staging and Refueling Areas 2-12
2.1.9 Construction Activities 2-13
2.1.10 Equipment and Refueling 2-15

2.1.11 Workforce 2-15
2.1.12 Project Compliance Plan 2-15
2.1.13 Deviations during Construction 2-16
2.1.14 Postconstruction Cleanup 2-17
2.1.15 Environmental Protection Measures 2-17
2.1.16 Existing ROW Grant Stipulations and Mitigation Measures 2-24
2.1.17 Operation and Maintenance 2-24
2.1.18 Abandonment, Termination, and Restoration 2-25
2.2 No Action Alternative 2-25
2.3 Alternatives Considered but Eliminated from Further Analysis 2-25
2.3.1 Brown Pit Quarry Laydown Yard Alternative 2-25
2.3.2 Beatty Airport Helicopter Refueling Station Alternative 2-25
3 AFFECTED ENVIRONMENT AND ENVIRONMENTAL CONSEQUENCES 3-1
3.1 Introduction 3-1
3.2 General Setting 3-4
3.3 Effects of the Proposed Action 3-5
3.3.1 Cultural Resources 3-5
3.3.2 Land Use Authorizations 3-6
3.3.3 Migratory Birds 3-6
3.3.4 Noise 3-7
3.3.5 Threatened and Endangered Species 3-7
3.3.6 Vegetation 3-9
3.3.7 Visual Resources 3-10
3.3.8 Wildlife 3-14
3.4 Effects of the No Action Alternative 3-14
4 CUMULATIVE EFFECTS 4-1
4.1 Introduction 4-1
4.2 Past and Present Actions 4-3
4.3 Reasonably Foreseeable Future Actions 4-3
4.4 Evaluation of Cumulative Impacts 4-3
4.4.1 Migratory Birds, Special Status Species, Vegetation, Wildlife 4-3
4.4.2 Proposed Action 4-4
4.4.3 No Action Alternative 4-5
5 CONSULTATION AND COORDINATION 5-1

5.1 Preparers and Reviewers 5-1
6 LITERATURE CITED 6-1

LIST OF FIGURES

Figure 1: Project Location and Land Status 1-2
Figure 2a: Double Pole "H-Frame" Structure Locations 2-5
Figure 2b: Double Pole "H-Frame" Structure Locations (Continued) 2-6
Figure 3: Design of Typical Single Pole Double Circuit Structure 2-7
Figure 4: Design of Typical Tangent H-Frame Structure 2-8
Figure 5: Design of Typical Dead End H-Frame Structure 2-9
Figure 6: Raptor Protection Devices 2-11
Figure 7: Map of Key Observation Points 3-11
Figure 8: KOP #1 South Alignment 3-12
Figure 9: KOP #2 North Alignment 3-13
Figure 10: Cumulative Effects Study Area Map 4-2

LIST OF TABLES

Table 1: Proposed Revisions to Surface Disturbance 2-2
Table 2: Legal Description of Distribution Line Corridor 2-2
Table 3: Revised Typical Design Characteristics 2-3
Table 4: Supplemental Authorities 3-1
Table 5: Other Resources and Uses 3-3
Table 6: Past and Present Rights-of-Way Acres in the CESA 4-3
Table 7: Past and Present Mineral Exploration and Mining Activities in the CESA 4-3

APPENDICES

Appendix A: Existing ROW Grant Stipulations and Mitigation Measures
Appendix B: List of Special Status Species with the Potential to Occur

ACRONYMS AND ABBREVIATIONS

ACEC	Areas of Critical Environmental Concern
ACSR	aluminum conductor steel-reinforced
APE	area of potential effects
APLIC	Avian Power Line Interaction Committee
BLM	Bureau of Land Management
BMD	Battle Mountain District Office
CEQ	Council on Environmental Quality
CFR	Code of Federal Regulations
CIC	Compliance Inspection Contractor
CNIDC	Central Nevada Interagency Dispatch Center
dB	decibels
DR	Decision Record
EA	Environmental Assessment
EIS	Environmental Impact Statement
EO	Executive Order
ESA	Endangered Species Act of 1973
FLPMA	Federal Land Policy and Management Act of 1976
FONSI	Findings of No Significant Impact
KOP	key observation point
kV	kilovolt
L_{dn}	equivalent day/night level
mcm	thousand circular mils
msl	mean sea level
NEPA	National Environmental Policy Act of 1969
NESC	National Electric Safety Code
NHPA	National Historic Preservation Act
NRS	Nevada Revised Statutes
NTTR	Nevada Test and Training Range
OPGW	optical ground wire
OSHA	Occupational Safety and Health Administration
PBO	Programmatic Biological Opinion
POD	Plan of Development
Project	Beatty to Tolicha Peak Double Circuit 24.9-kilovolt Distribution Line Project
RMP	Resource Management Plan
ROD	Record of Decision
ROW	right-of-way
TFO	Tonopah Field Office
US-95	United States Highway 95
USAF	United States Air Force
USC	United States Code
USFWS	United States Fish and Wildlife Service
VEA	Valley Electric Association
VRM	visual resource management

VALLEY ELECTRIC ASSOCIATION
BEATTY TO TOLICHA PEAK
DOUBLE CIRCUIT 24.9-kV DISTRIBUTION LINE PROJECT
ENVIRONMENTAL ASSESSMENT

1 INTRODUCTION

This Environmental Assessment (EA) has been prepared to analyze Valley Electric Association's (VEA) proposal for engineering and construction method refinements of the Beatty to Tolicha Peak Double Circuit 24.9-kilovolt (kV) Distribution Line Project (Project) located in Nye County, Nevada. The Project consists of removing portions of the existing distribution line and upgrading the distribution system by constructing a new 24.9-kV double-circuit distribution line from the VEA Beatty substation to the Tolicha Peak Air Force facilities located on the western side of the Nevada Test and Training Range (NTTR). Approximately 20.5 miles of the new 24.9-kV distribution line is situated on public land administered by the Bureau of Land Management (BLM), Tonopah Field Office (TFO), Battle Mountain District Office (BMD), and approximately 1 mile is located on private land. Figure 1 shows the Project alignment and land status.

This EA is prepared pursuant to Section 102 of the National Environmental Policy Act of 1969 (NEPA), as implemented by the regulations promulgated by the President's Council on Environmental Quality (CEQ 1978), and the Bureau of Land Management's National Environmental Policy Act Handbook H-1790-1 to ensure compliance with NEPA and CEQ regulations. The objective of NEPA is to ensure that the federal decision-making process recognizes natural and cultural resources and considers the potential environmental impacts of proposed actions before decisions are made and actions are taken. Therefore, this EA contains an explanation of the Proposed Action, an evaluation of the natural and cultural resources present, a description of alternative actions, and an estimate of the environmental impacts of all alternative actions. Also, it provides sufficient evidence and analysis to determine whether or not to prepare an Environmental Impact Statement (EIS) or a Finding of No Significant Impact (FONSI) (40 Code of Federal Regulations [CFR] 1508.9).

1.1 Background

The Project is currently authorized under BLM right-of-way (ROW) grants N-88360 (permanent) and N-88568 (short term). VEA submitted a Plan of Development (POD) and ROW applications for these ROW grants to the BLM on February 8, 2011, for the construction, operations, and maintenance of the Project. In March 2011, an EA (DOI-BLM-NV-B020-2010-0101-EA) was completed pursuant to Section 102 of NEPA (BLM 2011). A FONSI was signed and a Decision Record (DR) issued on April 26, 2011.

VEA informed the BLM of the proposed engineering and construction method refinements. As a result, the BLM TFO issued a Notice of Temporary Suspension to VEA via certified mail on July 3, 2013, for ROWs N-88360 and N-88568. The suspension was directed at ceasing any and all work on "H" structures (double-pole structures) and any use of a helicopter for any part of the Project in order to insure that the changes had been evaluated under the NEPA. Therefore, this EA has been developed to analyze the proposed changes described in the suspension letter to facilitate a ROW amendment and renewal request.

Figure 1: Project Location and Land Status

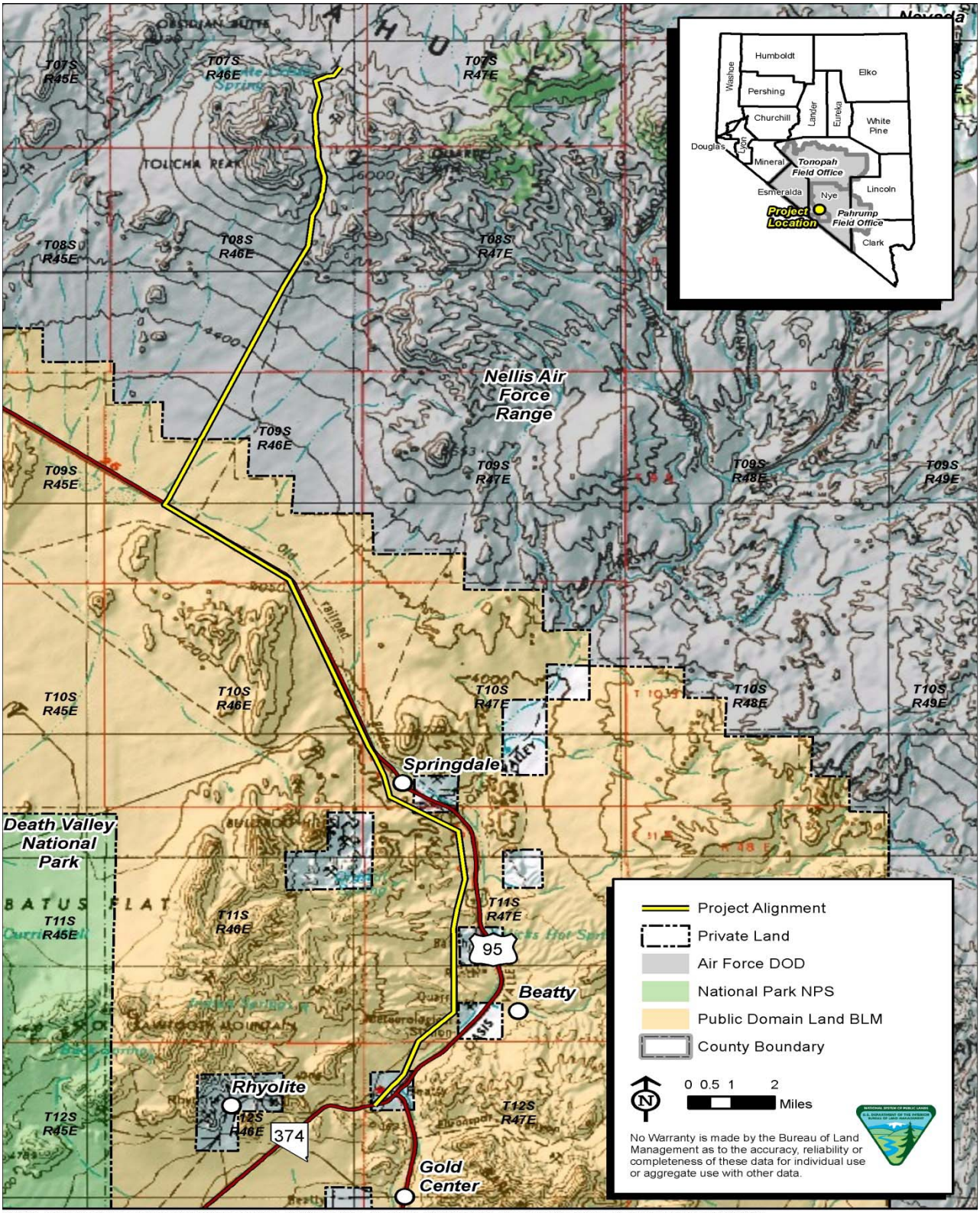

1.1.1 Project Description

An existing 24.9-kV distribution line, authorized by BLM case file Nev 066289, currently runs parallel with U.S. Highway 95 (US-95). A new double-circuit line is proposed to replace this existing line and would run parallel with US-95 for 19.6 miles. A single-circuit pole line would be constructed for the last 1.8 miles and would run 20 feet northwest and parallel to the existing Tolicha Peak tap-line, BLM ROW No. N-24739.

VEA is planning to operate a new 24.9-kV overhead double-circuit distribution line, which would extend approximately 21.5 miles including one mile on private land, originating at the VEA substation located in Beatty, Nevada, in T. 12 S., R. 47 E., Section 7, and continuing from the gate of United States Air Force (USAF) facilities for approximately 11 miles on lands managed by the USAF, northeast of US-95, in T. 9 S., R. 46 E., Section 16. The construction and operation of the Project provides more-reliable power to the customers using the line, including the USAF. The proposed Project would require VEA to install a small distribution substation consisting of an area of 100 feet by 100 feet and an enclosed 24.9/34.5-kV step-up transformer cabinet, to be located on the USAF facilities. The USAF has conducted its own environmental analysis of the Project.

In addition to the new distribution line, VEA would install approximately 21.5 miles of optical ground wire (OPGW)/fiber optic to the new 24.9-kV distribution line (N-88360), which would provide the USAF and VEA with a longer-distance distribution of communications data. This OPGW/fiber optic line is required by the USAF. The installation of the OPGW/fiber optic does not require a separate ROW, since this line would be installed on the new distribution structures.

1.1.2 Summary of Proposed Action

On August 13, 2013, VEA submitted a revised POD to the BLM describing refinements to the proposed engineering design and construction methods for the 24.9-kV distribution line. The proposed design refinements meet electrical industry standards and would be implemented to help improve reliability, reduce Project costs, or address additional environmental considerations. The refinements include the following:

- Adding H-frame structures to aid in avoiding sensitive areas;
- Using a stringing helicopter for the fiber optic line;
- Using a helicopter for placement of 5 structures in the ROW;
- Identifying a helicopter landing and refueling location;
- Adding bird diverters to guy wires;
- Adding TE Raysulate raptor protection; and
- Making minor design changes to the insulators, cross arms, conductors, cable shield wire, and ground clearances.

The sizes and locations of the ROWs would not change as a result of these activities. Surface disturbance activities would be overall reduced primarily due to the elimination of single-pole structures being replaced by double-pole structures that span greater distances.

This EA document is tiered to the 2011 EA document and addresses only the changes to the analysis to resources and land uses affected by the proposed design and construction method refinements (Proposed Action).

1.2 Purpose for the Proposed Action

The BLM's purpose is to consider approval of the applications for a grant amendment of ROW N-88360 for electrical distribution facilities and renewal of ROW grant N-88568 for short-term construction activities as authorized under Title V, Section 501, of the Federal Land Policy and Management Act of 1976 (FLPMA) or other public land acts is to meet the proponent's objective while preventing undue and unnecessary degradation. Additionally, it is the BLM's purpose is to consider approval of the engineering design and construction method refinement, and to consider allowance of helicopter use. The proponent's (VEA) objective is to refine the Project's design and construction methodology to help improve reliability, reduce Project costs, or to address additional environmental considerations while still satisfying a predevelopment contract with the USAF to construct new and upgraded distribution facilities. The overall Project would provide reliable, cost-effective electrical energy and communications service to the northwest boundary of the NTTR in an effort to support the Department of Defense missions within the NTTR.

1.3 Need for the Proposed Action

ROW N-88360 was authorized in 2011 based on a double-circuit 24.9-kV distribution line with single poles. Final engineering drawings that refine the ROW grant were recently submitted to the TFO in May 2013. These drawings include both a single-pole design as previously analyzed in DOI-BLM-NV-B020-2010-0101-EA, dated March 2011, and an H-frame structure. Additionally, VEA has requested the use of one or more helicopters for stringing and pulling the lines and transporting poles to approximately 5 locations.

The applicant has requested ROW N-88360 to be amended and to renew the short-term ROW N-88568 under the authority of the FLPMA, Title V.

The BLM needs to consider approval of the application for a grant amendment of the ROW and renewal of the short-term ROW to respond to its mandate under the FLPMA to manage the public lands for multiple uses in a manner that recognizes the Nation's need for reliable electrical energy distribution and its need to support a viable and effective defense system.

1.4 Decision to be Made

The TFO's Field Manager's decision to be made is whether to (1) grant the amendment and renewal to the ROWs unconditionally, through additional mitigation or stipulations, or (2) deny VEA's ROW amendment and renewal request. The decision would be made through consideration of the results of this environmental analysis conducted under the NEPA and other applicable federal, state, or local laws or requirements.

1.5 Relationship to Planning and Conformance with Land Use Plans

The Proposed Action is in conformance with the Tonopah Record of Decision (ROD) and Approved Resource Management Plan (RMP) (October 2, 1997). Although the Proposed Action is not specifically provided for in the RMP, it is clearly consistent with the Goals and Objectives of the RMP, which are to:

- Manage public lands in a manner that meets public, local, state, and federal agency needs for use authorizations such as rights-of way, permits, leases, and easements while avoiding or minimizing adverse impacts to other resource values, and

- Respond to public, local, state, and federal agency needs for land for community development, utility and other associated rights-of-way, communication sites, and other allowed uses of BLM-administered lands.

The BLM has the responsibility to manage the surface and subsurface resources on public lands located within the jurisdiction of the TFO. Page 19, number 6, Tonopah RMP, ROD states in part:

> All other lands within the Tonopah Planning Area in which there are no unresolvable conflicts with other resource values would be open to consideration for linear or areal rights-of-way, leases and land use permits.

The Tonopah RMP and ROD are the TFO's planning documents required by the FLPMA. These documents are available for review at the BLM TFO, 1553 S. Main Street, Tonopah, Nevada, or electronically at www.blm.gov/nv/st/en/fo/battle_mountain_field/blm_information/national_environmental.html.

1.6 Other Applicable Statutes, Regulations, Policies, Plans, and Environmental Analyses

1.6.1 Federal Land Policy and Management Act of 1976

The FLPMA (90 Stat. 2750; 43 United States Code [USC] 1701, 1713, and 1719) was passed to authorize the BLM's management of public lands. Section 501(a)(4) of the FLPMA gives the BLM the authority to grant, issue, or renew a ROW over, upon, under, or through public lands for "systems for generation, transmission, and distribution of electric energy[.]"

1.6.2 Title 43 CFR 2800

Title 43 CFR 2800 allows for issuing, amending, or renewing ROW grants for necessary transportation or other systems or facilities that are in the public interest and that require a ROW over, upon, under, or through public lands. The regulations at 43 CFR 2800.0–3 are the authority for issuing regulations providing for the use, occupancy, and development of the public lands through permits, easements, and ROWs.

1.6.3 Nye County Comprehensive Master Plan

The Nye County Comprehensive Master Plan is a long-range plan relating to public lands and how best to work collaboratively with the federal and state land-management agencies. This plan is intended to provide effective planning, communication, and coordination between Nye County and these agencies. This plan contains goals, objectives, and policies that serve to protect the health, safety, and welfare of Nye County residents, enhance their economic opportunities, and preserve their quality of life (Nye County 2011). The Proposed Action would be in conformance with Nye County plans and policies.

1.6.4 Existing NEPA Documentation

The EA prepared by the BLM in March 2011, DOI-BLM-NV-B020-2010-0101-EA, fully analyzed the major components of the Project including the permanent ROW, BLM case file

N-88360, and the short-term ROW BLM case file N-88568. The 2011 EA serves as the basis for the analysis herein.

Existing NEPA documentation that is applicable to this Project includes BLM case file Nev 066289. This file includes the existing distribution line along the corridor that was built in the 1960s. The proposed Project would affect this previous case file through retirement of portions of the existing line.

1.6.5 Scoping and Identification of Issues

Public comments were received during the March 2011 EA process. All of the comments were addressed in the final EA. Additional coordination was conducted for the revisions to the Project (Proposed Action) by the BLM. The following individuals, agencies, and organizations were consulted:

- U.S. Fish and Wildlife Service (USFWS)

2 PROPOSED ACTION AND ALTERNATIVES

2.1 Proposed Action

2.1.1 Overview

The Proposed Action is for the BLM to authorize the engineering design and construction method change, to approve helicopter use for, and to authorize an amendment to the existing ROW grant N-83360 as described in the revised POD dated August 13, 2013 and to renew short-term ROW grant N-88568. The revised POD contains revisions to components of the Project design and construction methods. The proposed design refinements meet electrical industry standards and would be implemented to help improve reliability, reduce Project costs, or address additional environmental considerations. These refinements include the following:

- Adding H-frame structures to aid in avoiding sensitive areas;
- Using a stringing helicopter for the fiber optic line;
- Using a helicopter for placement of 5 structures in the ROW;
- Identifying a helicopter landing and refueling location;
- Adding bird diverters to guy wires;
- Adding TE Raysulate raptor protection; and
- Making minor design changes to the insulators, cross arms, conductors, cable shield wire, and ground clearances.

The ROW dimensions and location would not be modified as a result of the Proposed Action. Laydown areas that were identified in the original grant would be removed. All proposed activities would be conducted within the existing authorized ROWs. The Proposed Action would not exceed the current authorized disturbance acreage.

Construction of the distribution line as permitted in the 2011 EA began in the spring and summer of 2013, and estimated completion and an in-service date by the summer of 2014. The revisions of the final engineering design, described above, will not change the current schedule. The same mitigation measures as those listed in the 2011 ROW grants would be applied to the amended and renewed grants (N-88360 and N-88568).

2.1.2 Project Disturbance

The refinements to the Project would decrease the acreage of surface disturbance, primarily by reducing the number of single-pole structures (378 to 326), constructing a narrower maintenance road (14 feet wide instead of 16 feet wide), not constructing 3 miles of the planned maintenance road in order to avoid sensitive cultural areas, and not constructing any staging areas within the ROW (seven staging areas were originally planned). The 2011 EA analyzed for total surface disturbance up to 208.86 acres (BLM 2011). The Proposed Action would not exceed the current authorized disturbance acreage. Table 1 summarizes the changes in Project disturbance for each major feature.

Table 1: Proposed Revisions to Surface Disturbance

Project Feature	Project Disturbance Authorized (acres)	Proposed Revisions to Disturbance (acres)	Difference between Authorized and Revision (acres)
Public Land (BLM)			
Maintenance road (public)	39.8	29.7	–10.1
Storage yards/staging area	2.52	0	–2.52
Single-pole structures	21.54	18.58	–2.96
Double-pole (H-frame) structures	0	4.29	+4.29
Difference			**–11.29**

2.1.3 Project Location

The ROW originates at the Beatty substation in T. 12 S., R. 47 E., Section 7 and terminates at the gate of the USAF facilities located in T. 9 S., R. 46 E., Section 16. The legal description of the corridor is included in Table 2.

Table 2: Legal Description of Distribution Line Corridor

Township/ Range	Section Number	Aliquot Part
Mount Diablo Base & Meridian, Nevada		
T. 12 S., R. 47 E.	5	NW¼
	6	SE¼, NE¼
	7	SW¼, NW¼, NE¼
T. 11 S., R. 47 E.	4	SW¼, NW¼
	5	NE¼, NW¼
	9	SW¼, NW¼
	16	SW¼, NW¼
	17	SE¼
	20	SE¼, NE¼
	29	SE¼, NE¼
	32	SW¼, SE¼, NE¼
T. 10 S., R. 47 E.	30	SW¼, NW¼
	31	SE¼, SW¼, NW¼
	32	SW¼
T. 10 S., R. 46 E.	2	SE¼, NE¼, NW¼
	11	NE¼, SE¼
	12	SW¼
	13	SE¼, SW¼, NW¼
	24	SE¼, NE¼
	25	NE¼
T. 9 S., R. 46 E.	16	NW¼
	17	SE¼, NE¼
	20	SE¼, SW¼, NW¼
	27	SW¼
	28	SE¼, SW¼, NW¼
	29	NE¼
	34	SE¼, NE¼, NW¼
	35	SW¼

2.1.4 Right-of-Way Description

The portion of the Project located within public land administered by the BLM measures 20.5 miles long. The permanent ROW (N-88360) measures 40 feet wide (20 feet on either side of the centerline). The temporary ROW (N-88568) measures an additional 20 feet on either side of the permanent ROW. The combined width of the ROWs is 80 feet. The ROW dimensions and location would not be modified as a result of the Proposed Actions. Outside the BLM ROWs, the Project extends 1 mile on private land and 10.8 miles on land managed by the USAF.

2.1.5 Facility Design Factors

The revisions to the design methods, construction, and maintenance of the Project would meet or exceed the requirements of the National Electric Safety Code (NESC); the standards of the U.S. Department of Labor, Occupational Safety and Health Administration (OSHA); and VEA's requirements for safety. Based on the recommendations of the Avian Power Line Interaction Committee (APLIC), adequate spacing between conductors would be implemented. In addition, shield wire would be grounded at regular intervals, and bird diverters and covers would be used when needed. Table 3 lists the proposed revised typical design characteristics for the Project.

Table 3: Revised Typical Design Characteristics

Feature/Component	Description
Type of structure	Single and double pole
Structure height	45 to 70 feet
Span length	Approximately 75 to 800 feet
Number of structures/mile	Approximately 18 per mile
Structure base	Direct embedded
Voltage	24,900/14,400
Circuit configuration	Double-circuit 24.9 kV/14.4 kV
Conductor size	1 single 4/0 aluminum conductor steel-reinforced (ACSR) neutral 6 336-mcm (thousand circular mil) ACSR conductors
Conductor types	Conductor – 336-mcm ACSR Linnet 4/0 ACSR Penguin Shield wire – optical ground wire, 48-count fiber Insulators – gray polymer
Ground clearance of conductor	32 feet
Pole foundation depth	6.5 to 10.5 feet
Land disturbed (approximate)	Typically 3 square feet per single-pole structure Typically 9 by 3 feet to 7 by 3 feet for double-pole structures
Temporary workspace	Temporary workspace would include an area 20 feet on each side of the permanent right-of-way. An area of approximately 30 by 40 feet per structure site is required for line construction equipment.
Wire pulling, splicing sites	An all-terrain vehicle would be used for wire pulling along the permanent ROW for the distribution line. Wire-pulling sites (approximately 16 sites) would require approximately 0.24 acres/site (175 feet by 60 feet). Sites for tensioning equipment are located approximately 2.5 miles apart. Fiber cable would be pulled by a helicopter.

The following sections further describe the purpose for the Project features that are proposed to be refined as a part of the Proposed Action.

2.1.5.1 Structure Type

The double-circuit portion of the distribution line would consist of single- and double-pole "H-frame" structures. The single-circuit portion of the distribution line would consist of single-pole structures. The double-circuit tangent structures would have two fiberglass cross arms, and dead ends would have four. On the dead ends, two fiberglass arms would be installed back to back on the pole for strength, for a total of four arms on the structure. The structures would have polymer insulators with seven conductors strung through them, with the circuits sharing one of the conductors as the neutral. There also would be one fiber optic (OPGW) cable installed at the top of the pole. The locations of the proposed installation sites for the H-frame structures are shown on Figures 2a and 2b. The typical double-circuit single-pole structure is shown on Figure 3, and tangent and dead end H-frame structures are shown on Figures 4 and 5, respectively.

The double-pole H-frame structures would typically be found on corners, rolling-hill-type terrain, and culturally sensitive areas. For corners, using single poles, the guying would have needed to be outside the permanent ROW and thus would have created the need for an H-frame structure ahead and back of each corner single-pole structures to maintain structural integrity on corners while keeping the guy wires landed within the ROW. For the rolling hill terrain, H-frame-style structures would be installed; these would allow significantly longer spans in these areas, thereby reducing the number of structure locations to about half for these areas (that is, two poles installed at one location with 300- to 500-foot spans between structure sites instead of one-pole structures installed with 150-foot spans). Also, several locations in culturally sensitive areas required longer spans to protect the areas, so an H-frame-style structure is proposed on each side of the culturally sensitive areas to gain the longer length of span and maintain the guying within the ROW.

VEA is proposing the use of direct burial (typically 10% of total pole length plus 2 feet for single circuit and 3 feet for double circuit) of wood poles. Pole heights before direct burial would range from 45 to 70 feet tall with embedment between 6.5 and 10.5 feet deep. Electrical conductors approximately 32 feet high above the ground would be used (subject to variance depending on terrain). Tangent poles would be self-supporting, while angle and dead-end poles would be guyed. The diameter at the base of the structure would range from 2 to 3 feet for single-pole structures and from 9 feet by 3 feet to 7 feet by 3 feet for double-pole structures.

The span length between the structures would range between 75 and 800 feet, with most structures having a span length of 325 feet. The longer spans would needed to span culturally sensitive areas and for areas with terrain restrictions. The shorter spans would accommodate angle structures in order to keep the guying within the permanent ROW.

2.1.5.2 Insulators

The original Project design included gray porcelain insulators. VEA is proposing to use gray polymer insulators. The purpose of this design change is that the polymer insulators are lighter and would be easier to install, have a longer service life, and are not as easily damaged by gunfire.

Figure 2a: Locations of Double-Pole H-Frame Structures (1 of 2)

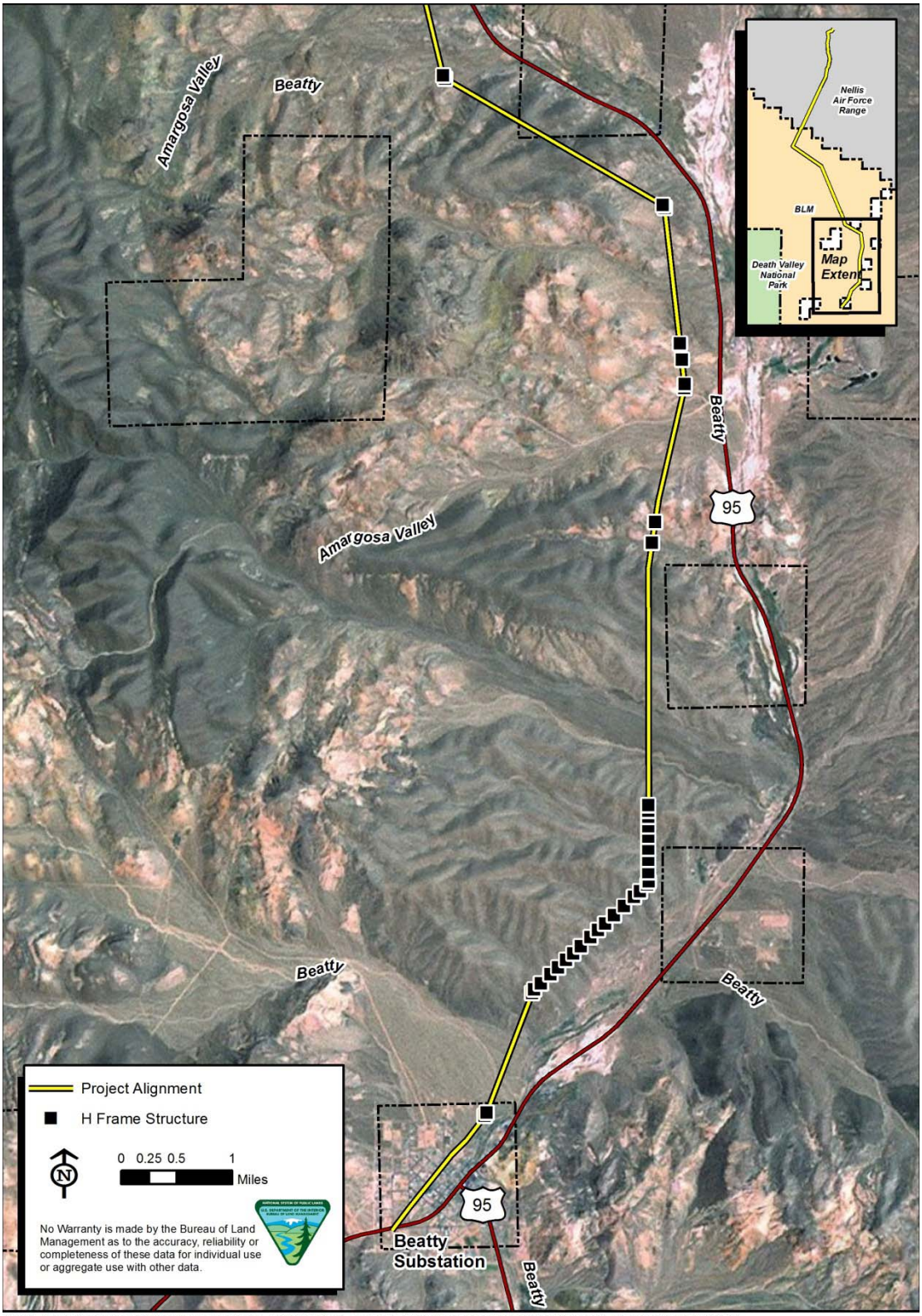

G:\GIS_Production\Projects\ValleyElectricAssociation_456995\Tolicha_Peak_EA_216073\Map_Docs\mxd\ProjectAlignment_2p.mxd-aburvall-8/2/2013

Figure 2b: Locations of Double-Pole H-Frame Structures (2 of 2)

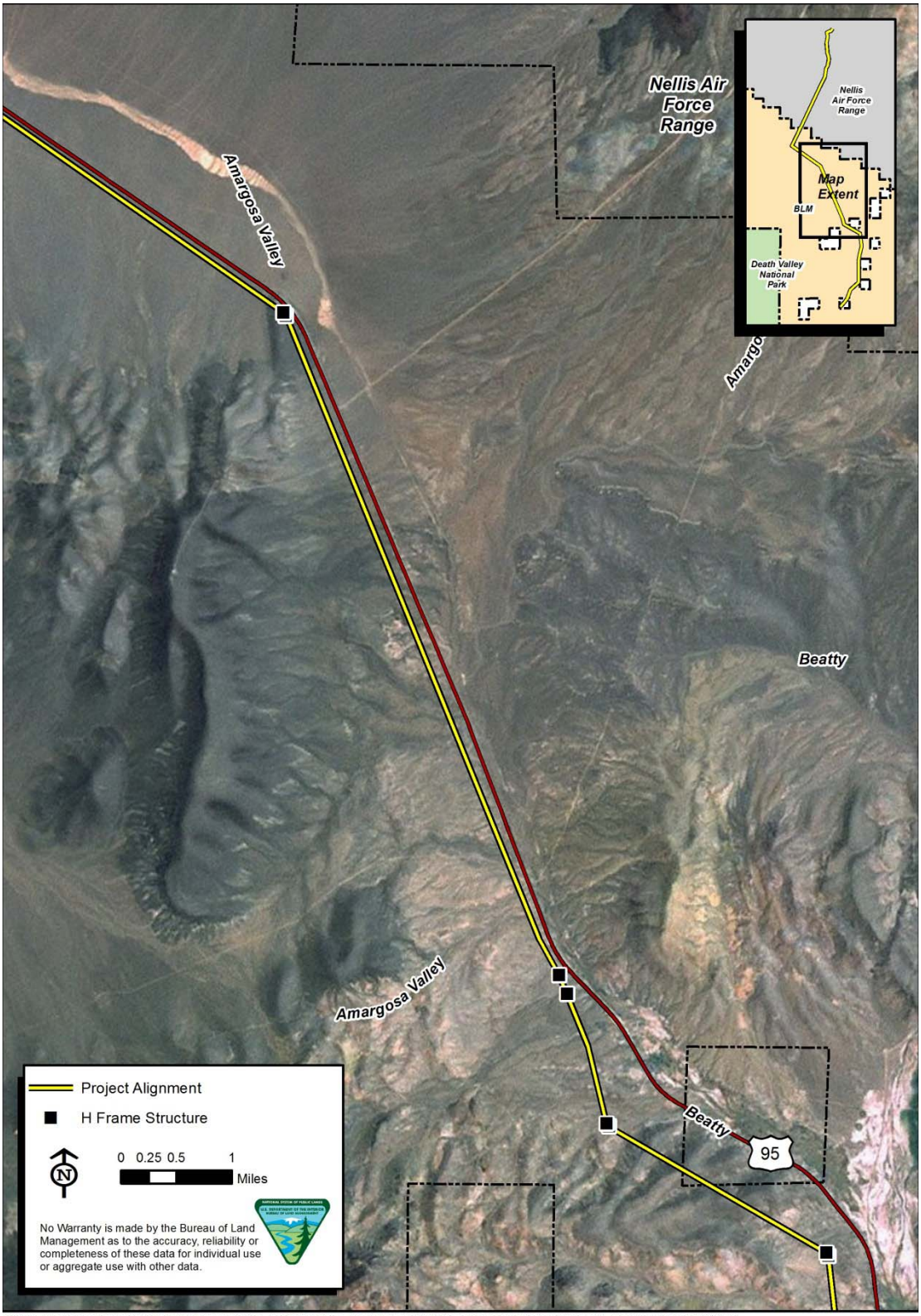

G:\GIS_Production\Projects\ValleyElectricAssociation_456995\Tolicha_Peak_EA_216073\Map_Docs\mxd\ProjectAlignment_2p.mxd-aburvall-8/2/2013

Figure 3: Design of Typical Single-Pole Double-Circuit Structures

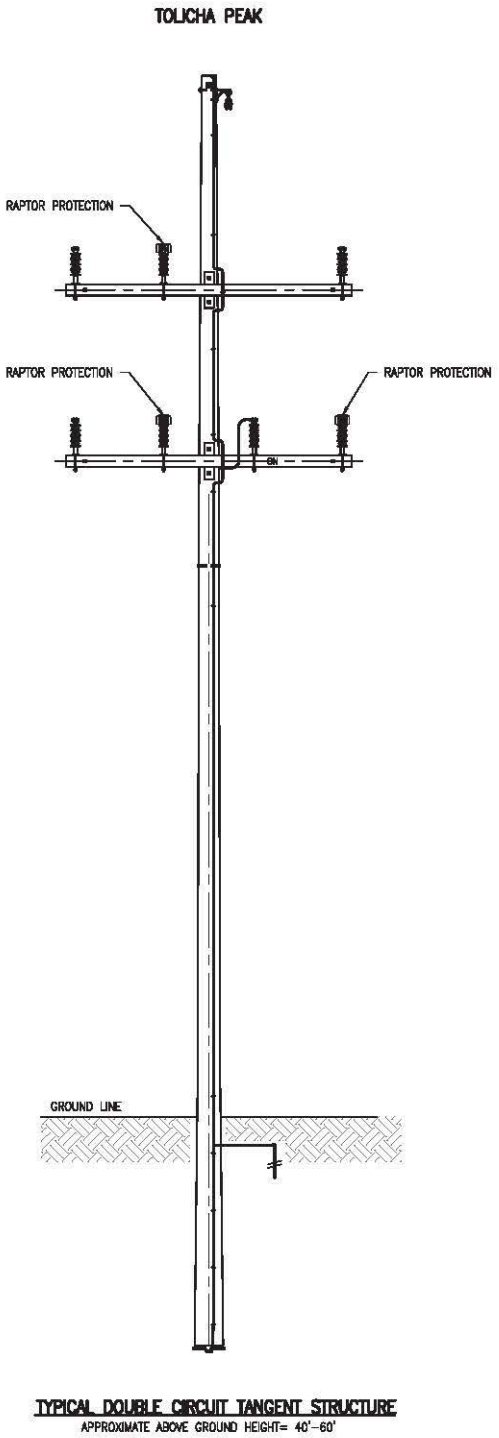

Figure 4: Design of Typical Tangent H-Frame Structures

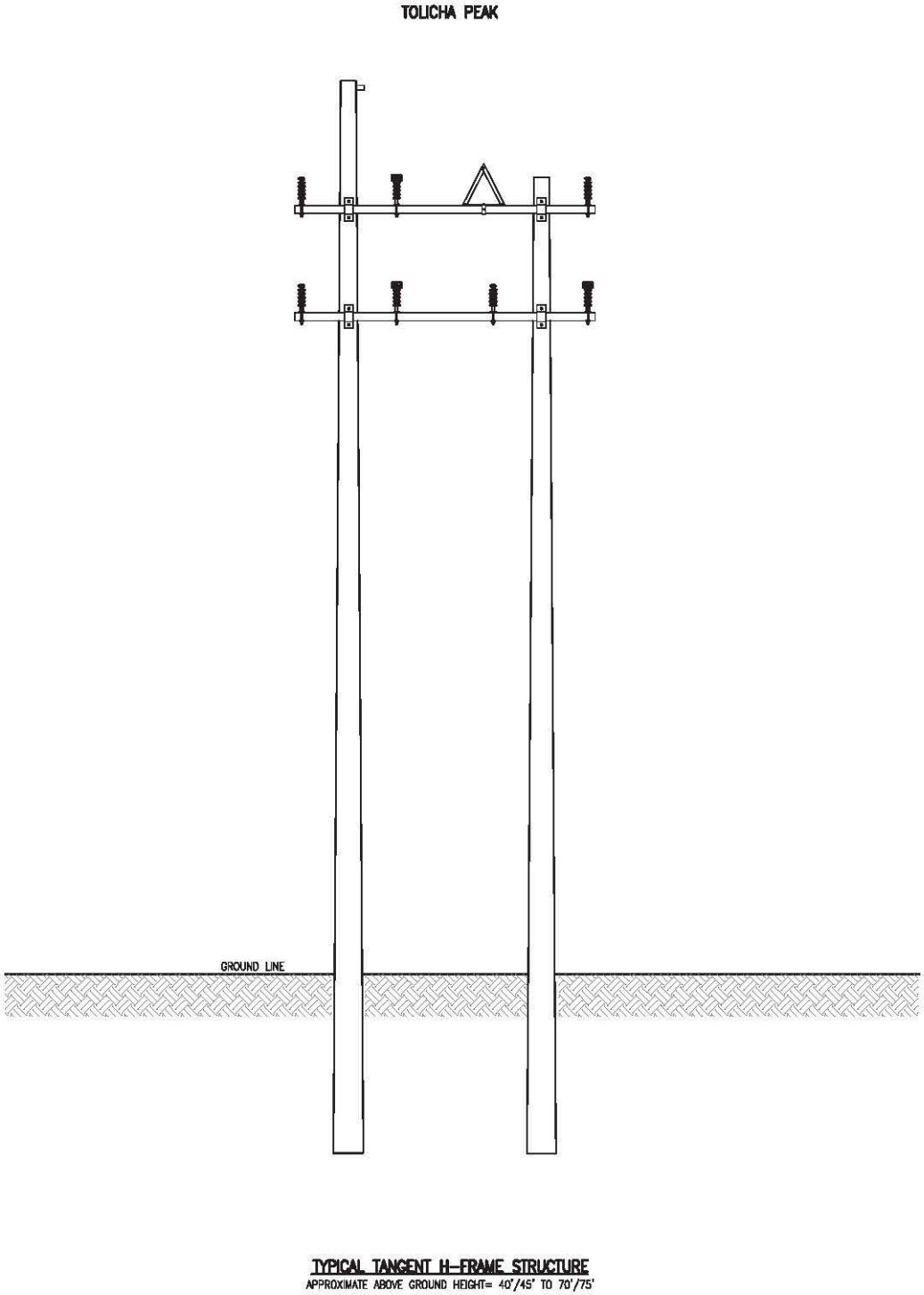

Figure 5: Design of Typical Dead-End H-Frame Structures

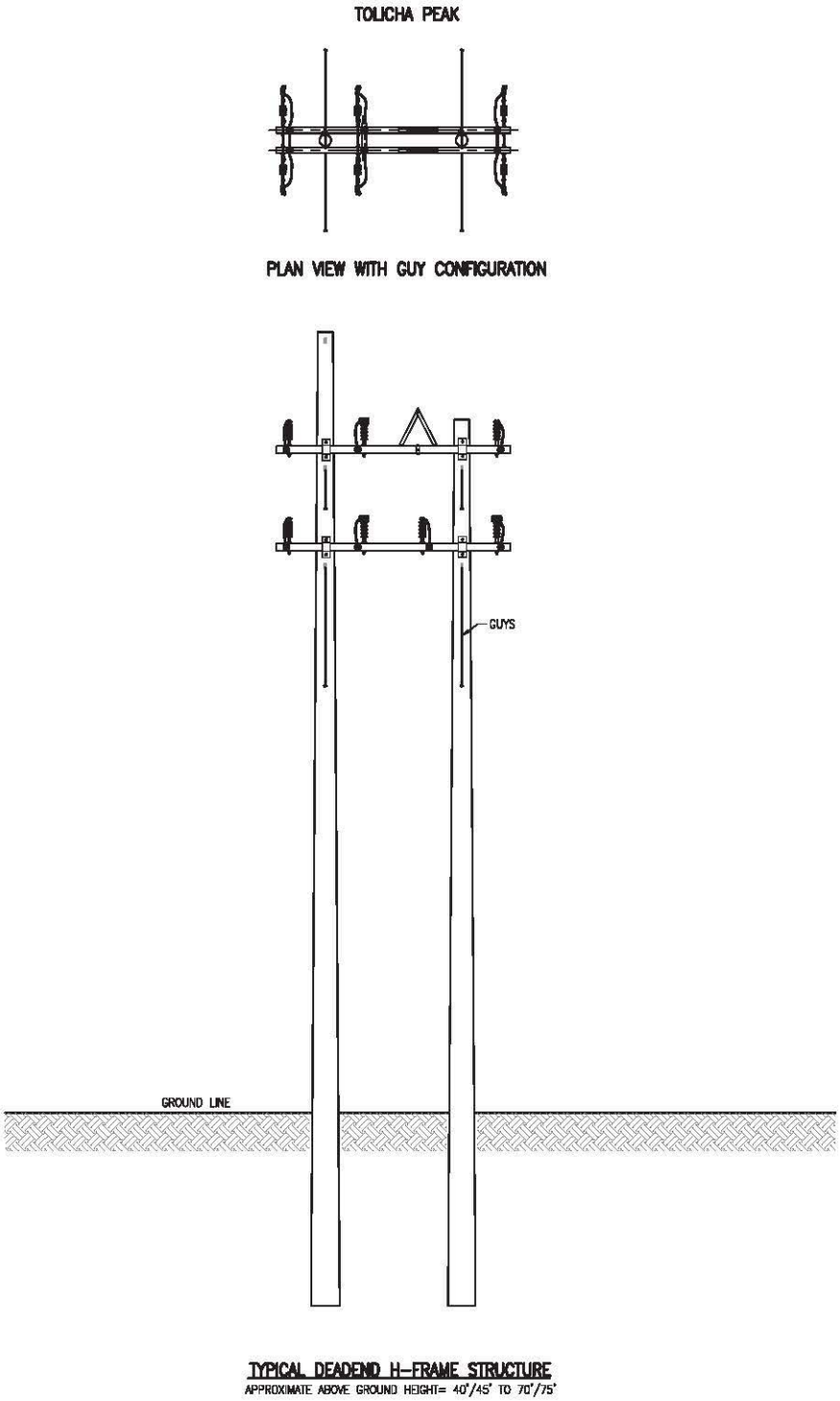

2.1.5.3 Cross Arms

The original Project design included wooden cross arms. VEA is proposing to use fiberglass cross arms. The arms would be a light gray color. The purpose of this design change is that fiberglass cross arms are lighter, would be easier to install, have a longer service life, and have a cleaner visual line. They would have a cleaner visual line because they do not require any braces.

2.1.5.4 Conductor

VEA is proposing to use conductor material that is not nonspecular. This material is more readily available and would reduce construction costs. VEA anticipates that, with the sandy soils and windy conditions in the Project Area, the shine from these conductors would be gone in a few months or less.

The original Project design had conductor heights ranging from 15.5 to 18 feet above the ground. VEA is proposing a new minimum conductor height above the ground for the 24.9-kV line of 26 to 30 feet at 120 degrees Fahrenheit. The NESC has a minimum of 15.5 feet, with additional clearance provided per VEA design standards. The exact height of each structure would be governed by topography and safety requirements for conductor clearance.

2.1.5.5 Aluminum Conductor Steel Reinforced Cable

Current load estimates on the system are requiring an increase in the conductor size of the lower circuit from 1/0 wire to 336 ACSR cable. This change would prevent the need to re-conductor the distribution line in the near future.

2.1.5.6 Additional Bird Diverters and Raptor Protection

For improved visibility for birds, the USAF requested that guy wires be marked with plastic coils. In addition, a plastic sleeve would be placed over the conductor and insulator to prevent birds from coming into contact with the wires and being injured. The plastic sleeves would be installed where needed to meet the recommended APLIC standards for preventing bird interactions with power lines. Figure 6 illustrates the raptor-protection devices.

2.1.5.7 Communications Cable Shield Wire

The communications shield wire design is proposed to be increased from 24 fibers to 48 fibers and would be shared by VEA and the USAF.

2.1.6 Access and Maintenance Roads

2.1.6.1 Access Roads

Existing access roads would continue to be used to access the ROWs. Access road improvements would fall within the requested ROW within approved areas. VEA does not anticipate that any new disturbance would occur on the existing access roads as a result of the Proposed Action.

Figure 6: Raptor-Protection Devices

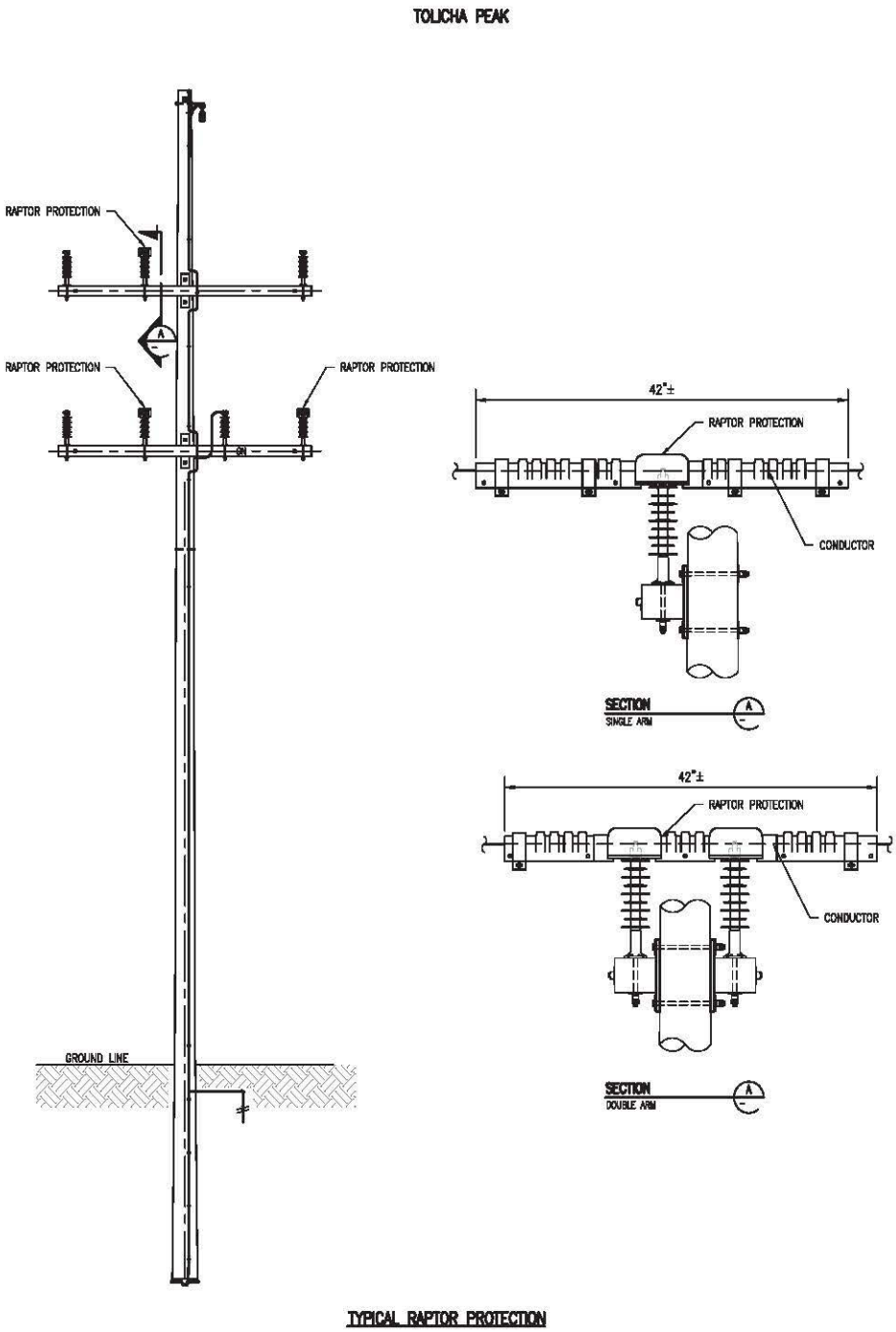

2.1.6.2 Maintenance Road

A maintenance road is associated with the permanent ROW. Most of the maintenance road and associated ROW would follow an existing two-track road that previously accessed a mining claim for exploration under BLM case file N-74152. In accordance with 43 CFR 3802, the claimant would not be required to obtain a ROW to access its claim. No reclamation of road would be required by claimant.

The 2011 EA analyzed for a 16-foot-wide road spanning 20.5 miles within the ROW. The road as currently constructed is now 14 feet wide. In addition, 3 miles of the road were not approved for construction due to sensitive cultural resources. Therefore, the proposed final dimension of the maintenance road would be 17.5 miles long. VEA anticipates that the maintenance road would be only an overland two-track road with no additional disturbance. Signage would be posted on access roads and/or a preventative type obstruction would be placed at certain areas on public lands that may inhibit the use of off-road access or to gain access to private lands.

2.1.7 Structure Site and Laydown Areas

The Proposed Action would use fewer structure sites and laydown areas due to the elimination of 51 single-pole structures but would add 41 double-pole structure sites that could be slightly larger than the single-pole sites.

Trucks would transport the single-pole and double-pole structures to each structure site. The trucks transporting the double-pole structures would be of similar size as the trucks analyzed in the 2011 EA. At each structure site, work areas are required to facilitate the safe operation of equipment and construction operations. Construction laydown areas would be located in previously disturbed areas whenever possible (that is, along access roads). At each location, a work area would be cleared and leveled only if necessary. In most relatively level terrain, this would not be needed. Structure pieces would be delivered to the laydown area where workers would assemble the pole and attach insulators and hardware. The pole would be erected using a crane from the staging area.

The work area would be cleared of vegetation only to the extent necessary. Access within the work area would be overland travel; structures would be assembled in relatively level areas without the need for blading. After line construction, all work areas identified as temporary disturbance would be restored.

2.1.8 Staging and Refueling Areas

Temporary material storage yards would be required for construction materials at suitable locations along the distribution line and public access ways. These staging areas would serve as reporting locations for workers, parking spaces for vehicles, and storage spaces for equipment and materials. The original POD included, and the 2011 EA analyzed, seven staging areas on public land administered by the BLM within the ROW, each measuring 0.36 acre, for the Project. At this time, VEA is proposing to use only one 3-acre site that has been previously disturbed and that is located on private property outside the ROW. The Proposed Action would include helicopter refueling activities in this area.

2.1.9 Construction Activities

2.1.9.1 Structure Installation

At each structure location, land would be temporarily and permanently disturbed. Approximately 0.057 acre for each single-pole location and 0.11 acre for each double-pole location would be temporarily disturbed by construction. Permanent disturbance would be approximately 0.02 acre (3 square feet) for the single-pole sites and approximately 0.04 acre (6 square feet) for the double-pole sites.

Excavation and setting of structures would be performed in a continuous operation, thereby preventing the possibility of caving of holes or injury to animals or persons in the vicinity of the construction. No excavations would be left uncovered when VEA personnel or contractor personnel are not on site.

Surveying and routing work for the distribution line would help in identifying areas of poor soil stability. If soil conditions prevent installation of structures at locations as designed by the Project Engineer, VEA's contractor would be required to notify the Project Engineer and the BLM of conditions existing at the structure location. If possible, the problem would be remedied by relocation of the structure upline or downline from the initial location. Similar protocols would be followed to avoid any identified sensitive environmental resources.

Backfill would be accomplished with an excavator and with hand and/or pneumatic tamping equipment. Tamping equipment would be transported to the site by overland vehicle as needed. Workers either would walk in from the nearest access road or would be transported to the site via truck.

2.1.9.2 Conductor Installation

Conductor and shield wire would be delivered on reels by flatbed truck to the various conductor pulling sites along the ROW. Other equipment required to install the conductor would include reel stringing trailers, tensioning machines, pullers, a high-reach bulldozer, and several trucks, including a bucket truck. One of two methods might be used for installing conductor and shield wire.

The conventional method is to pull out a sock line or "pullrope" along the route of the line and manually lift the rope into stringing sleeves. The rope is brought to a puller at one end and a tensioner on the other end. The tensioner holds the wire reels and maintains enough tension to keep the wire off the ground and vegetation, while the puller pulls the wire through the stringing sleeves.

Temporary guard structures would be installed to ensure that the conductors do not drop into the road or other locations that could result in a safety hazard. Splicing would occur between conductor spools. After the conductors are pulled in, conductor tension would be adjusted to properly sag the conductors. The conductors would then be clipped to the insulators and the stringing roller wheels removed.

Typically, conductor pulling sites for stringing the conductor would be spaced at approximately 2.5-mile intervals. However, distances between each site would vary depending on the geography, topography, and environmental sensitivity of the specific area; the length of the

conductor pull; and the accessibility by equipment. Pulling sites would require a temporary working area. At each pulling site, stringing equipment would be set up approximately 200 feet from the initial structure for leveraging the conductor pull safely. Angle structure pulling sites might be located outside the temporary construction ROW, but all conductor pulling operations would be contained within the environmental baseline study corridor.

Sites for tensioning equipment and pulling equipment are typically areas approximately 175 feet by 60 feet. However, when construction occurs in the steep and rough terrain, these sites might require larger, less symmetrical pulling and tensioning sites.

As an alternate method, when necessary, light-duty vehicles would be used for the structure-to-structure stringing, thereby minimizing the requirement for vehicle travel within the centerline. A light line would be carried from structure to structure using a light-duty vehicle and overland travel and would be installed through travelers at each structure. The light line would then be attached to lead lines and pulled back through the travelers by the stationary ground-based equipment at the previous wire setup site. Finally, the conductors would be attached to the lead line and pulled back through each structure to the next wire-pulling site.

After the conductors reach the pulling site, they would be correctly sagged and tensioned, then permanently clipped into the clamps at each structure. Any grading required at the wire setup site would be accomplished by hand or by small excavators that would reach the site via the access and spur roads, or by overland travel.

2.1.9.3 Ground Rod Installation

Typical grounding requirements include a bare copper ground rod to be installed at intervals of no less than every 1,320 feet (or four per mile), per NESC regulation, and at major angle points. Typical ground rods are 8 feet long and would be installed below the ground surface prior to installation of conductors.

2.1.9.4 Helicopter Stringing and Pole Placement

VEA would use a helicopter (for example, from the MD 500 series) to string the fiber cable. The helicopter would be staged on private land. The flight route for the helicopter would be from the private staging and refueling area directly to the alignment. The helicopter would operate within the ROW and over public land in accordance with Federal Aviation Administration Part 91 General Operating Flight Rules, Section 91.119. In flight emergencies would be exempt.

The helicopter would pick up a leader attached to the fiber optic cable, fly parallel to the distribution poles, and place the leader on the poles. The leader would be installed on approximately 3 miles of poles, before bringing the fiber optic cable through for tensioning. Upon completion of a run, the helicopter would not be in use (parked on private land) while the fiber optic cable is pulled through and installed on the poles.

The helicopter would be used intermittently over the 6 weeks that it would take to pull the fiber optic cable. VEA estimates that, during any given week, the helicopter would be used about 40% of the working hours.

During the initial inspection of access to structures 111 through 115 (5 structures) it was found that access to these sites by truck was difficult, and that the use of a helicopter to bring the poles

to these 5 structures would decrease additional surface disturbance. VEA will use a Vertol style twin prop helicopter (for example, a Sikorsky S58-T series) or similar to bring the poles to each of these locations. The poles will be located in the ROW, near structure 125 (right off Pioneer Road), and attached to the helicopter and transported along the ROW to the specific structure location.

It is estimated that this particular operation will take no longer than 2 days. The helicopter will be parked and refueled as the stringing helicopter, on private land.

2.1.10 Equipment and Refueling

The only new pieces of equipment associated with the proposed engineering design and construction method refinements are the truck that would be used to transport the H-frame structures to their installation sites (same truck as hauling the single poles), the stringing helicopter, and the twin-prop refueling vehicle for the helicopter.

VEA would implement standard refueling procedures for heavy equipment, such as cranes, blades, cats, drill rigs, etc., that is left on the ROW for long periods. This equipment would be refueled in place. However, no personal or light-duty vehicles would be allowed to refuel on the ROW. The stringing helicopter and twin prop helicopter would be refueled outside the ROW on private land.

2.1.11 Workforce

The addition of helicopters for stringing the fiber optic line and pole placement would add two or three people to the workforce for approximately 6 weeks. No other changes in the workforce would result from the Proposed Action.

2.1.12 Project Compliance Plan

VEA would continue to contact the BLM Authorized Officer or his or her designee at least 10 days prior to commencing construction and/or any surface-disturbing activities associated with the Proposed Action. If needed, a preconstruction conference would be scheduled with the BLM and VEA prior to commencing construction and/or surface-disturbing activities on the ROW associated with the Proposed Action. VEA personnel and contractor's representatives involved with this ROW would attend this conference to review the stipulations of the BLM ROW grant, including stipulations of the revised POD and other documents as determined by the BLM.

VEA would not initiate any construction or surface-disturbing activities on the ROW associated with the Proposed Action until after the release of the BLM Notice to Proceed issued by the Authorized Officer or his or her designee and the issuance of all applicable local and state permits.

VEA would conduct all activities associated with the construction, operation, and termination of the Project within the authorized limits of the ROWs. VEA would construct, operate, and maintain the facilities, improvements, and structures within this ROW in strict conformity with the POD and any final design criteria as approved by BLM and made part of the grant. Any relocation, additional construction, or use that is not in accordance with the approved POD

would not be initiated without the prior written approval of the Authorized Officer or his or her designee. VEA would make a copy available on the ROW area during construction.

A Compliance Inspection Contractor (CIC) would continue to provide environmental oversight and compliance regulatory activities for the BLM. The CIC would be empowered to act as the BLM representative. The Memorandum of Understanding (MOU) between the BLM and VEA was signed in May 2013, containing the Scope of Work to describe the authority and responsibilities of the CIC. This MOU would remain in effect for the Project. The CIC would assist construction personnel with any environmental issues that arise during construction.

The contractor would be required at all times to take all reasonable precautions for the safety of employees on the Project and of the public, and would comply with all applicable provisions of federal, state, and local safety laws and building and construction codes, as well as the safety rules and regulations of VEA.

VEA and the construction contractor shall maintain a safety program in connection with construction activities. The safety program shall include safety training, elimination of unsafe conditions, and weekly tailgate safety meetings. Safety practices shall meet or exceed the safety practices in the latest edition of the VEA safety manual and the National Electric Safety Code.

Construction and work activities shall comply with all requirements of OSHA and the Nevada Division of Occupational Safety, including provisions of Nevada Revised Statutes (NRS) 618.375 pertaining to occupational safety and health. Work would also comply with all legal requirements in NRS 455.200 through NRS 455.250 pertaining to activities to be performed near overhead electrical lines.

VEA and VEA's construction contractor shall be responsible for initiating, maintaining, and supervising all safety precautions and programs in connection with the work, including giving notices, erecting and maintaining all safeguards, and complying with all laws, ordinances, regulations, codes, and lawful orders of any public agency.

Totally enclosed containment would be provided for any trash stored on site. Spill kits would be on site, and diapers would be immediately placed under leaking equipment to prevent ground contamination. All construction waste, including trash and litter, garbage or solid waste, petroleum products, and other materials, would be removed to a disposal facility authorized to accept such materials.

All construction, operation, and maintenance activities would comply with all applicable federal, state, and local laws and regulations regarding the use of hazardous substances. The construction or maintenance crew foreman would be responsible for maintaining compliance with all applicable laws and regulations. In addition, an on-site inspector or CIC would be present during construction to make sure that all materials are used and stored properly.

2.1.13 Deviations during Construction

Minor changes in the approved Project are sometimes necessary to accommodate or mitigate on-site circumstances. In the past, Project construction has been stopped pending further agency approval of the requested variance. These delays are extremely costly and could jeopardize the economic feasibility of the Project. When the variance requested is for an action that has been assessed in the NEPA document for the Project and the resulting disturbance area is within the

existing approved temporary and permanent ROWs, the CIC would have the authority to approve or deny the requested variance if the authority is delegated to the CIC by the BLM. The empowerment of the CIC to approve minor variances would expedite the Project while protecting resources.

Minor changes that occur would not require amending the ROW or cause any reinitiation triggers for a biological opinion or for archeological surveys. Minor changes include movement within the existing approved temporary and permanent ROWs. The CIC and biological monitors would review the identified sensitive areas as recorded in the 2011 EA and the area of the minor change to identify any additional avoidance concerns. The following are examples of changes that could be approved by the CIC:

1. Disturbance areas: Modify disturbance areas within the authorized ROW and temporary-use boundaries. If the modifications could affect any special-status species, the effects would be mitigated under the direction of the CIC prior to implementation.

2. Power lines: Move pole locations or install erosion-control devices, erect temporary fences, change tension locations, create temporary work sites, change access points to poles or structures, and cable spool storage locations within authorized areas.

3. Roads: Use existing previously disturbed roads.

2.1.14 Postconstruction Cleanup

VEA or its contractor, as appropriate, would be required to have a continuous cleanup program throughout construction. VEA or its contractor, as appropriate, would restore land crossed to its preconstruction condition. Restoration would include the removal of deep ruts and the disposal of foreign objects such as slash, construction materials, etc. Reclamation would include recontouring affected areas to match the surrounding terrain and cleaning trash out of gullies.

Waste materials and debris from construction areas would be collected, hauled away, or disposed of at approved landfill sites (example the Beatty transfer station). Equipment used could include a grader, front-end loader, tractor, and a dozer with a ripper. Procedures for restoration and ROW maintenance would be coordinated with the TFO. VEA would be required to keep a clear work area and would have a covered portable dumpster on site to contain any trash that could blow away. After completion of the Project, the Project Engineer and CIC would complete a final walk-through. The Project Engineer would note any waste material left on site and any ruts or terrain damage or vegetation disturbance that has not been repaired.

2.1.15 Environmental Protection Measures

VEA anticipates no conflicts with resources or public health and safety during and after completion of this Project. VEA proposes the following specific environmental protection measures.

2.1.15.1 Air Quality

Air emissions produced during grading and construction of the proposed Project would be short term and would cease upon completion of construction. No dust permit was required, since the

work would be performed outside the Nye County Planning Zone. Dust would be minimized by application of water to disturbed areas. Additional measures could include the following:

- Water would be applied to the ground during the construction and use of the structure pads, to access roads, and to other disturbed areas as necessary to control dust.

- During excavation, backfilling, contouring, and rehabilitation, the disturbed soil would be either wetted or treated by other means satisfactory to the Authorized Officer sufficiently to effectively reduce airborne dust and reduce soil erosion. A regular maintenance program would be implemented that would include, but would not be limited to, soil stabilization and reapplication of dust-abatement methods as necessary.

- Construction and maintenance activities would be conducted to minimize disturbance to vegetation and drainage channels. Existing roads would be left in their condition prior to construction or restored to a condition equal to or better than their condition prior to construction.

- All construction vehicle movement outside the ROW would be restricted to designated access or public roads. New access roads may be created if approved by the Authorized Officer.

- All requirements of those entities having jurisdiction over air quality matters would be adhered to, and any permits needed for construction activities would be obtained. Open burning of construction trash would not be allowed.

- All pads and structure pads would be watered prior to and during all construction activities. All Project personnel would be educated on the site dust mitigation plan.

- Access to work areas would be by overland travel whenever possible to minimize grading.

2.1.15.2 Fire Protection Plan

All federal, state, and county laws, ordinances, rules, and regulations that pertain to prevention, presuppression, and suppression of fires would be strictly adhered to. All personnel would be advised of their responsibilities under the applicable fire laws and regulations. VEA would be responsible for notifying the Central Nevada Interagency Dispatch Center (CNIDC) at (775) 623-3444 and the BLM TFO at (775) 482-7800 when a Project-related fire occurs within or adjacent to the construction area.

VEA would be responsible for any fire started in or outside the Project Area by its employees or operations during construction. VEA would be responsible for any costs associated with fire suppression and rehabilitation. Prior to the arrival of federal firefighting forces, VEA would take aggressive action to prevent and suppress the spread of wildland fires caused by VEA employees or operations within the Project Area. When reporting a fire to the CNIDC, VEA would provide specific information, preferably coordinates (lat./long.), size of fire, exactly what is burning, and wind speed and direction.

Wildfire suppression is the responsibility of the BLM on public lands surrounding the Project Area.

Costs involved with contractor-caused fires would be charged to the contractor. There would be no extension of time for line construction for delays caused by contractor-related fires. Specific construction-related activities and safety measures would be implemented during construction of the distribution line in order to prevent fires and to ensure quick response and suppression if a fire occurs. These activities and requirements include the following:

- During all construction activities, VEA would provide, and store in a place easily accessed at each construction site, shovels and one 5-pound ABC dry powder carbon monoxide fire extinguisher.

- During welding, cutting, or other operations where a fire could be started, VEA would maintain at least a 100-gallon tank with a pump on site to suppress any vegetation fires that might be started.

- VEA would have the appropriate notification numbers including the BLM Fire Dispatch Center, the BLM Project Representative, and the VEA Construction Project Manager readily available on site for all employees in case of fire.

- VEA would maintain the power line ROW to reduce the threat of wildland fires caused by the power lines and would also protect the power lines from any fires that might be started in the area.

- All construction and operating equipment would be equipped with applicable exhaust spark arresters.

- Fire extinguishers would be available on the active sites.

- Water that is used for construction and dust control would be available for fire fighting.

- Personnel would be allowed to smoke only in designated areas, and they would be required to follow applicable BLM regulations regarding smoking.

2.1.15.3 Hazardous or Solid Waste

VEA would comply with applicable laws pertaining to proper use and disposal of potentially hazardous materials. No hazardous materials would be used on the ROW. Trash and solid waste generated from construction activities would be stored in closed containers at the construction yards and staging sites located at staging locations on private lands and public lands, and would be disposed of in accordance with regulatory requirements. Any spills would be immediately reported to the CIC and VEA construction inspectors so that cleanup can be implemented immediately. VEA would notify the appropriate authorities if a spill occurs. All spill materials would be labeled and stored at a VEA designated facility off the ROW for accumulation and disposal. Portable chemical sanitary facilities would be available and used by all personnel during construction. These facilities would be maintained by a local contractor.

Initially proposed mitigation measures to ensure compliance with applicable hazardous materials regulations would include the following:

- No paint or permanent discoloring agents would be applied to rocks or vegetation to indicate the limits of survey or construction activity.

- Hazardous materials would not be drained onto the ground or into streams or drainage areas.

- Totally enclosed containment would be provided for all trash. All construction waste including trash and litter, garbage, other solid waste, petroleum products, and other potentially hazardous materials would be removed to a disposal facility authorized to accept such materials. No debris of any kind would be deposited in or on the ROW.

- No biodegradable debris would be left in the ROW.

2.1.15.4 Cultural and Paleontological Resources

Cultural resources are defined as buildings, sites, structures, or objects, each of which has historical, architectural, archeological, cultural, and/or scientific importance. Numerous laws, regulations, and statutes, on both the federal and state levels, seek to protect cultural resources.

In consultation with the BLM, and with the concurrence of the Nevada State Historic Preservation Office, any areas that contain cultural resources of significance or whose eligibility for inclusion on the National Register of Historic Places is unevaluated would be avoided, mitigated, or "treated" and recorded as appropriate. Archaeological Class III inventories have been conducted in the Project Area.

Prior to construction, Project personnel would be instructed on the protection of cultural, paleontological, and ecological resources. VEA employees, contractors, and suppliers would be reminded that all cultural resources are protected. If a resource is uncovered, it would be left in place, work would cease, and notification would be made to the VEA representative and the appropriate BLM authorized office, by telephone at (775) 482-7800, with written confirmation to follow, immediately upon such discovery. In addition, areas that demonstrate a high potential for buried paleontological resources would be monitored during construction.

Cultural resources would continue to be considered during post-environmental assessment phases of plan implementation. Any cultural or paleontological resources (historic or prehistoric site or object) discovered by VEA, or any person working on its behalf on public or federal lands, would be immediately reported to the Authorized Officer. VEA would suspend all operations in the immediate area of the discovery until written authorization to proceed is issued by the Authorized Officer. An evaluation of the discovery would be made by the Authorized Officer to determine appropriate actions to prevent the loss of significant cultural or scientific values. VEA would be responsible for the cost of evaluation. The Authorized Officer would make any decision regarding suitable mitigation measures after consulting with VEA. VEA would be responsible for the resulting mitigation costs.

Site-Specific Protection Measures Identified by the BLM

District-Lithic Procurement [includes several sites; 26NY3204 (CRNV-54-4490) and 26NY14239 (CRNV-61-14976) are the eligible sites]. The following measures would be implemented:

- A cultural resource monitor will be present at all times during construction in this area;
- No vehicles are authorized between structures surrounding these sites; only existing roads will be used;
- No heavy duty vehicles will be used; preferably off-highway vehicles will be used when off existing roads; light-duty trucks, at most, will be used;
- All driving off existing roads will be on the desert (no scraping, no clearing, no disturbance); and
- Driving off the existing roads will be on the centerline of the ROW only, since the centerline avoids all features.

Pipeline-26NY14266 (CRNV-61-14999). The following measures will be implemented:

- Overland access will not occur before the pipeline is covered/protected; and
- A cultural resource monitor will be present during the installation of the pipeline cover.

Historic site-26NY14250 (CRNV- 61-14986). The following measures will be implemented:

- No new roads or disturbance will be created between the two structures; and
- A cultural resource monitor will be present in this area during construction.

Lithics (Nellis) 26NY14254 (CRNV-61-14990). The following measure will be implemented:

- No new roads or disturbance will be created between the two structures.

2.1.15.5 Noxious Weeds

It has been noted that State of Nevada–listed noxious weeds were identified in the Project Area(s). Noxious weeds within the construction area would be addressed by VEA by the initiation of mitigation measures in consultation with the BLM noxious weed management specialists. ROW monitoring and noxious weed abatement prior to and following construction would be required by the BLM. VEA has a weed management plan for the Project. The weed management plan includes preventative measures, treatment methods, and monitoring activities. The weed management plan is included in the Project POD and includes the following preventative measures:

- All contractor vehicles and equipment would arrive at the work site clean and weed-free;

- Prior to being allowed access to the ROW or ancillary facilities, an inspector would ensure that vehicles and equipment are free of soil and debris capable of transporting noxious weed seeds, roots, or rhizomes;

- The distribution line ROW and ancillary facilities would be inspected for noxious weeds prior to the clearing of vegetation on the ROW and ancillary faculties. Any infestations

would be recorded for reference in clearing the ROW and ancillary facilities for construction and for postconstruction monitoring;

- In areas where infestations have been identified or noxious weeds noted in the field, the contractor would stockpile cleared vegetation and salvaged topsoil adjacent to the area from which they are stripped to eliminate the transport of soil-borne noxious weed seeds, roots, or rhizomes. During reclamation, the contractor would return topsoil and vegetative material from infestation sites to the areas from which they were stripped;

- The contractor would implement the reclamation of disturbed lands following construction as described in the Reclamation Plan;

- Continuing revegetation efforts would ensure adequate vegetative cover to prevent the invasion of noxious weeds;

- The contractor would ensure that straw bales used on the Project for sediment barrier installations or mulch distribution are certified weed-free;

- Equipment would not be sprayed with pre-emergent chemicals as a preventative measure, since these chemicals target a wide range of vegetation. As a result, the use of such chemicals could affect the success of revegetation efforts; and

- Field wash stations would not be used as a preventative measure, since they have not proven to be an effective means of weed control.

2.1.15.6 Vegetation and Soil

Areas of temporary disturbance would be restored to preconstruction condition in accordance with applicable mitigation measures. Permanent disturbance would be maintained for operation and maintenance of the distribution line. Measures designed to protect vegetation during construction could include the following:

- In designated areas, sensitive plants and/or habitat would be flagged and structures would be placed to allow spanning these features, where feasible, within limits of standard structure design.

- In newly disturbed temporary work areas, the soil would be salvaged and would be distributed and contoured evenly over the surface of the disturbed area after construction completion. The soil surface would be left rough to help reduce potential wind erosion.

- Grading would be minimized by driving overland within work areas whenever possible.

- All disturbed areas, including areas of overland travel that result in visible impacts, would be seeded with a BLM-approved seed mix.

2.1.15.7 Migratory Birds and Raptors

The distribution line would also provide raptor protection in compliance with the standards described in the *Suggested Practices for Avian Protection on Power Lines: The State of the Art in 2006* (APLIC 2006). To prevent perching, a cone (TE Raysulate parts BCIC-G-DPIN-795-01-24 or similar) would be installed on the top of each distribution line pole along the entirety of the distribution line. In addition, shield wires would be grounded at regular intervals, and insulated hardware would be used. All power poles would use approved raptor deterrents. Angle points would have bird diverters on guy wires.

Predisturbance nesting surveys would be conducted during breeding season prior to any surface-disturbing or vegetation-clearing activities.

2.1.15.8 Livestock Management

The proposed Project is within the Razorback Allotment. The proposed distribution line would cross existing fences. Any disturbance to an existing fence would require maintenance and repair to BLM specification.

2.1.15.9 Desert Tortoises

Applicable measures for the protection of desert tortoises (*Gopherus agassizii*) required by the *BLM Programmatic Biological Opinion for Implementation of Proposed Actions within Desert Tortoise Habitat Administered by the [BLM], Tonopah Field Office, Nye County, Nevada*, and all other measured agreed upon by the BLM and the USFWS for this Project, would continue to be implemented. These measures include the following:

- All vehicles, equipment, and crews would be escorted by a biologist driving a utility terrain vehicle at all times when in desert tortoise habitat;
- A maximum speed limit of 15 miles per hour would be enforced on Project roads and unpaved public access roads in desert tortoise habitat;
- All Project sites would be searched for desert tortoises prior to implementation of work activities;
- The ground under and around all parked vehicles would be checked before the vehicles are moved; and
- No cross-county travel or travel outside the ROW would be permitted.

2.1.15.10 Additional Measures

As described below, additional environmental protection measures could be implemented during the construction, operation, and maintenance of the Proposed Project, including the following:

- No paint or permanent discoloring agents would be applied to rocks or vegetation to indicate the limits of survey or construction activity;

- Overhead static wires would be marked with highly visible devices where required by governmental agencies;

- The distribution line would be regularly patrolled and properly maintained in compliance with applicable safety codes;

- Fences and gates would be repaired or replaced to their original condition if they are damaged by construction activities; and

- Construction noise would be minimized through practices that avoid or minimize actions that can typically generate greater noise levels or generate distinctive impact noise.

2.1.16 Existing ROW Grant Stipulations and Mitigation Measures

A copy of the existing ROW grant stipulations and Decision Record that describes additional mitigation measures for the Project is included in Appendix A. The Proposed Action is subject to these measures, and VEA would continue its compliance with these measures aided by on-site third-party compliance inspection contractors.

2.1.17 Operation and Maintenance

Safety is a primary concern in the design, construction, and operation of the Project. An AC distribution line would be protected with power circuit breakers and related line relay protection equipment. If conductor failure occurs, power would be automatically removed from the line. Lightning protection would be provided by shield wires along the line.

Maintenance would include distribution line and pole repair and/or replacement. Routine maintenance might be performed on the distribution line periodically. In addition, VEA would annually inspect the distribution line from a light, off-road vehicle or a helicopter. VEA would make repairs and/or facility replacement, as necessary. VEA would not routinely travel within the ROW, and maintenance would not include the construction of new access roads. Equipment damaged by vandals would be replaced immediately.

VEA anticipates that the electrical equipment and monopoles would have a lifespan of approximately 50 to 60 years or more, depending on maintenance operations and climatic conditions. Structures, conductors, shield wire, insulators, and hardware might be left in place, dismantled, and replaced or removed from the ROW during the life of the Project.

Emergency maintenance, such as repairing downed wires during storms and correcting unexpected outages, would be performed by VEA or its contractors. VEA would respond to emergency conditions along the proposed route as soon as practical after an incident. The length of time needed to make the repairs would depend on the nature of the outage. VEA manuals include emergency response procedures as well as operations and maintenances activities for substations, metering stations, and distribution lines. These procedures would be implemented for this Project as necessary.

VEA would maintain the proposed distribution system by monitoring, testing, and repairing equipment.

Dust control during maintenance of the distribution line would be managed the same as during construction. Monitoring and maintenance would be done from approved or existing access roads.

2.1.18 Abandonment, Termination, and Restoration

The temporary areas of disturbance would be recontoured to match the surrounding terrain. Construction sites, material storage yards, and access roads would be kept in an orderly condition and free of trash throughout the construction period. Refuse and trash would be collected at the temporary material staging construction yards (pulling and tensioning sites) in a closed container until it is removed from the sites and disposed of in an approved manner. Oils and fuels would not be dumped on the ROW. Waste oils or chemicals would be hauled to an approved site for disposal by VEA.

Upon retirement, poles, conductors, and hardware associated with the 24.9-kV distribution line (Nev 066289 and N-88360) would be either cut off at ground level or totally removed. VEA prefers total removal when applicable. Remaining holes would be filled with soil gathered from the immediate vicinity. The areas where the poles were removed would be raked to match the surrounding topography. Bladed areas would be recontoured to preconstruction conditions. Four eligible cultural sites contain poles needing removal. Existing roads may be used for pole removal. The poles would be removed by hand. A cultural monitor would work with VEA to insure that no cultural resources are damaged.

2.2 No Action Alternative

Under the No Action Alternative, VEA would continue to construct, operate, and maintain the Project as described in the February 2011 POD and March 2011 EA documents and the mitigation measures and stipulations set forth in the FONSI and DR signed on April 26, 2011, by the TFO.

2.3 Alternatives Considered but Eliminated from Further Analysis

2.3.1 Brown Pit Quarry Laydown Yard Alternative

The Brown Pit Quarry was considered as a potential staging and materials storage area. This area is currently graded for this type of work. The quarry would allow staging a larger number of poles and would provide adequate space for loading the helicopter with structures for hauling. This area is located east of structure 114, south of Pioneer Road, and west of US-95. VEA determined that this area would not be needed to support the Project activities.

2.3.2 Beatty Airport Helicopter Refueling Station Alternative

The Beatty Airport was considered as a potential refueling station but was dropped after taking the distance of travel into consideration compared to the location of the proposed refueling station, which is on private land and is closer to the ROW. Beatty Airport is approximately 5 miles from the start of the ROW and approximately 26 miles from end of the ROW on BLM public lands. The private land is located across US-95, approximately 1 mile east of the ROW, 7.5 miles from the south end of the ROW, and 13 miles from the north end of the ROW. The use of the Beatty Airport would increase the overall cost and time of use of the helicopter and would require the helicopter to fly over the town of Beatty during the duration of construction. Therefore, this location has been removed as a possible refueling station due to these reasons.

3 AFFECTED ENVIRONMENT AND ENVIRONMENTAL CONSEQUENCES

3.1 Introduction

The BLM is required to address specific elements of the environment that are subject to requirements specified in statute or regulation or by Executive Order (EO). Table 4 lists the elements that must be addressed in all environmental analyses and states whether the Proposed Action would affect those elements.

When preparing this EA, VEA used the best available information to describe the existing environment and the Applicant's Proposed Action. This information serves as a baseline from which to identify and evaluate environmental changes resulting from all alternatives.

Supplemental authorities that are subject to requirements specified by statute or EO must be considered in all BLM documents. These are listed in Table 4. The table lists the elements and their status as well as the rationale to determine whether an element would be affected by the Proposed Action. Supplemental authorities that might be affected by the Proposed Action are analyzed in this chapter following the discussion of the affected environment for each element, resource, or use.

Table 4: Supplemental Authorities

Supplemental Authority Element	Not Present	Present/Not Affected	Present/May Be Affected	Rationale/Reference Section
Air Quality		X		The 2011 EA states that no significant impact to air quality would result from the Project. The Proposed Action does not introduce any new elements to the Project that would have an affect on air quality. Not analyzed further in this EA.
Areas of Critical Environmental Concern (ACEC)	X			No ACECs are present in the Project Area or vicinity. Not analyzed further in this EA.
Cultural Resources			X	The Proposed Action would aid in the avoidance of sensitive cultural sites identified in the ROW. See Section 3.3.1.
Environmental Justice		X		Neither the Proposed Action nor the No Action Alternative would disproportionally affect any low-income or minority populations as described in Environmental Justice Executive Order 12898. Not analyzed further in this EA.
Farmlands (Prime and Unique)	X			No farmlands are present in the Project Area. Not analyzed further in this EA.

Supplemental Authority Element	Not Present	Present/Not Affected	Present/May Be Affected	Rationale/Reference Section
Fish Habitat	X			No fish habitat is present in the Project Area. Not analyzed further in this EA.
Floodplains	X			No floodplains are present in the Project Area. Not analyzed further in this EA.
Noxious Weeds and Invasive and Non-native Species		X		VEA's committed practices described in its weed management plan and existing ROW grant stipulations would prevent and treat any weed infestations resulting from Project activities. The Proposed Action does not introduce any new elements that would affect noxious weed management for the Project. Not analyzed further in this EA.
Migratory Birds			X	The Proposed Action introduces additional avian and raptor protection measures. VEA's committed practices and existing ROW stipulations provide protection for migratory birds. See Section 3.3.3.
Native American Religious Concerns	X			At the time of publication of this EA, no written or verbal tribal concerns have been brought forward to the BLM. Consultation is ongoing. Not analyzed further in this EA.
Threatened and Endangered Species			X	The USFWS and the Nevada Natural Heritage Program identified the threatened Mojave desert tortoise as potentially present in the Project Area. See Section 3.3.5.
Wastes, Hazardous and Solid		X		Solid waste created during construction activities would be collected and disposed of off site at a landfill. Control measures are in place for oil and hazardous spills. A spill containment kit would be stationed at the helicopter refueling and landing pad area.
Water Quality – Surface and Ground (includes Water Quantity)	X			The 2011 EA states that no hydrological areas would be affected by the Project. The Proposed Action does not introduce any additional activities or measures that would affect water resources. Not analyzed further in this EA.
Wetlands and Riparian Zones		X		Not analyzed further in this EA.

Supplemental Authority Element	Not Present	Present/Not Affected	Present/May Be Affected	Rationale/Reference Section
Wild and Scenic Rivers	X			The section of the Armargosa River within the Project Area is not designated as wild and scenic. Not analyzed further in this EA.
Wilderness	X			

The elements listed in Table 4 above that do not occur in the Project Area would not be affected by the Proposed Action or alternatives and are not discussed or analyzed further in this EA. The elimination of nonrelevant issues follows CEQ regulations, as stated in 40 CFR 1500.4. Environmental justice and noxious weeds and invasive and non-native species are two supplemental authority elements that are present but that would not be affected by the Proposed Action.

In addition to the elements listed in Table 4 above, the BLM considers other important resources and uses that occur on public lands in which impacts could occur from implementation of the Proposed Action. Other resources or uses of the human environment that have been considered for this EA are listed in Table 5. Resources that could be affected by the Proposed Action are analyzed in this chapter following the discussion of the affected environment for each resource or use.

Table 5: Other Resources and Uses

Other Resources/Uses	Not Present	Present/Not Affected	Present/May Be Affected	Rationale/Reference Section
Fire Management				
Grazing Management		X		The Project is located within the Razorback Allotment. The 2011 EA stated that the Project would not result in a decrease in animal unit months. The Proposed Action does not introduce any new elements that would have an affect on grazing management. Not analyzed further in this EA.
Land Use Authorization			X	The Proposed Action would update existing ROW N-88360 and N-88568. See Section 3.3.2.
Minerals		X		The 2011 EA stated that mineral resources would not be affected. The Proposed Action does not introduce any new elements that would affect mineral resources. Not analyzed further in this EA.

Other Resources/Uses	Not Present	Present/Not Affected	Present/May Be Affected	Rationale/Reference Section
Noise			X	The use of a helicopter for stringing fiber optic line would increase noise levels in the ROW during construction. See Section 3.3.4.
Paleontological Resources	X			There are no known fossil bearing strata within the Project Area. Not analyzed further in this EA.
Recreation		X		The Proposed Action does not introduce any element that would contribute to impacts to recreation activities. The 2011 EA stated that no impacts to recreation were expected from the Project. Not analyzed further in this EA.
Socio-economics Values		X		The Proposed Action would increase the workforce by only a few people for a few days. Therefore, the analysis in the 2011 EA would apply to the Proposed Action. Not analyzed further in this EA.
Soils		X		No additional impacts to soils are anticipated as a result of the Proposed Action beyond what was analyzed in the 2011 EA. Not analyzed further in this EA.
Special-Status Species (BLM Sensitive)			X	See Section 3.3.5.
Vegetation			X	See Section 3.3.6.
Visual Resources			X	See Section 3.3.7.
Wild Horses and Burros		X		Not analyzed further in this EA.
Wildlife			X	See Section 3.3.8.

3.2 General Setting

The Proposed Action is located at the northern end of the Armargosa Desert in Nye County, Nevada. Most of Nevada, including the Project Area, is within the Basin and Range Physiographic Province, which is characterized by linear mountain ranges and intervening valleys arranged generally in a north-south parallel pattern. The Mojave Desert is characterized by hot, dry summers and cool, dry winters. Average precipitation of 3.5 inches occurs sporadically from either winter rains or summer thundershowers. The elevation in the Project Area ranges from 1,100 feet to 1,750 feet above mean sea level (msl).

The alignment begins in Beatty, west of the Amargosa River, and ends approximately 40 miles north of Beatty. The landscape is typical of lower to moderate elevations in the Mojave Desert, with flat expanses of sandy soil punctuated by rocky mounds and hills. Predominant indigenous vegetation is white bursage and creosote bush, with some Joshua trees and cacti at higher elevations. Death Valley lies about 8 miles to the west of Beatty with Beatty Mountain and Bare Mountain to the east and the Bullfrog Hills to the west. The Amargosa River, an intermittent river that ends in Death Valley, flows on the surface through part of the Beatty area but is not counted as a body of water in U.S. Census Bureau statistics. Large ephemeral washes discharge into the Amargosa River to the southeast. These support limited desert riparian vegetation. The Project is mainly in the creosote vegetation community in a very low-density tortoise habitat as identified by the USFWS.

3.3 Effects of the Proposed Action

3.3.1 Cultural Resources

3.3.1.1 Affected Environment

The Area of Potential Effects (APE) for an undertaking is defined in the National Historic Preservation Act (NHPA) Section 106 regulations [36 CFR 800.16(d)] as "the geographic area or areas within which an undertaking may directly or indirectly cause alterations in the character or use of historic properties, if any such properties exist." The APE considered for the Proposed Action includes the 80-foot-wide ROWs, associated pull areas, lay-down or equipment storage areas, and access roads (both new construction and existing) necessary for the construction and subsequent maintenance of the distribution line.

A Class III inventory was completed by cultural contractors between June 2010 and December 2010 under BLM Cultural Resource Use Permit N-5464l to comply with NHPA regulations. Locations for the double-pole structures have been selected to avoid culturally sensitive areas. Where poles are located in a sensitive area, the cultural stipulations in Section 2.1.2.3 and Appendix A of this EA and in the March 2011 EA would apply. Avoidance measures would include using existing roads instead of building a new service road and hand installation of poles and lines where necessary. If it is impossible to avoid a significant cultural site, a Historic Properties Treatment Plan will be developed and completed before any ground-disturbing activities take place.

The TFO management and staff, VEA Project lead, and cultural contractor conducted a field visit in December 2010 to examine some cultural resource sites and the alignment of segments of the proposed ROW. They determined that a different ROW alignment for part of the power line needed to be surveyed. The survey for the second alignment was completed December 23, 2010.

3.3.1.2 Environmental Consequences

Based on the implementation of the environmental protection measures, avoidance measures, and ROW grant stipulations, and ongoing monitoring by the CIC, VEA does not anticipate any additional impacts to cultural resources beyond what was disclosed in the March 2011 EA. The Proposed Action could have beneficial effect by using double-pole structures to avoid culturally sensitive areas. In addition, VEA would not construct a maintenance road along the 3-mile span

of cultural sensitive areas. Therefore, the Proposed Action would not have additional negative direct or indirect impacts beyond the current authorized Project and ROW. This resource is not analyzed further in this EA.

3.3.2 Land Use Authorizations

3.3.2.1 Affected Environment

The BLM ROW program is designed to coordinate the actions of individuals, government, and business to promote the sharing of ROWs, to prevent unnecessary environmental damage to lands and resources, and to protect the holders' investments in improvements on the ROW. The BLM ensures that undue or unnecessary degradation of public or private land does not occur, nor any negative impacts to other aspects of the environment.

The Proposed Action would require the BLM to approve the engineering design and construction method refinements to amend existing ROW N-88360 and renew existing ROW N-88568. No other existing ROWs would be affected by the Proposed Action. The private landowners of the property that would be used for staging and refueling the helicopter have documented their approval of use of the land for the Project.

3.3.2.2 Environmental Consequences

Since the existing ROWs that would be affected are issued to VEA and the changes are being requested by VEA, the modification of the ROWs is not considered a conflict in land use. In addition, the owners of the private property being used for the Project have been properly notified and agreed to the activities associated with the Proposed Action. This resource is not analyzed further in this EA.

3.3.3 Migratory Birds

3.3.3.1 Affected Environment

A migratory bird survey was conducted by a contractor in concert with the BLM to determine the effects that the VEA Beatty to Tolicha Peak power line upgrade would have on migratory birds. This review indicated that soaring raptors such as golden eagles, prairie falcons, and peregrine falcons are known to be present in the Project vicinity. No nesting habitat was identified in the Project ROW, but open foraging habitat is present. Open desert species reported as having the potential to be present include the crissal thrasher, LeConte's thrasher, loggerhead shrike, phainopepla, vesper sparrow, and western burrowing owl. These species are typical residents of dry, open desert habitat. Sporadically vegetated areas and vacated burrows, which are present in the ROW, could provide suitable foraging and nesting habitat (Converse Consultants 2010).

3.3.3.2 Environmental Consequences

Ongoing biological monitoring activities by the CIC would prevent any direct impacts to migratory birds resulting from construction. The Proposed Action would not result in any increase in disturbance to migratory bird nesting or foraging habitat.

3.3.4 Noise

3.3.4.1 Affected Environment

Federal recommendations for acceptable noise levels at residential receivers are generally in the range of 55 decibels (dB) or an equivalent day/night level (L_{dn}) of 65 dB L_{dn}, based on recommendations by EPA (1974) and on the 65 dB L_{dn} criterion applied by the U.S. Department of Housing and Urban Development and other federal agencies. These criteria are typically applied to noise from transportation noise sources but may be used to assess the compatibility of other noise sources relative to residential land uses provided that consideration is given to potential disturbances due to impulsive sound, tonal content (whistles, music, etc.), and the prevalence of nighttime activities.

Noise due to construction activities can be considered less than significant if the following occurs:

- The construction activity is temporary;
- Use of heavy equipment and noisy activities (helicopter use) is limited to daytime hours;
- No pile driving occurs; and
- All industry-standard noise-abatement measures are implemented for noise-producing equipment.

These general parameters acknowledge that people are not as likely to be annoyed by activities that are perceived as being necessary for normal commerce, as long as the inconveniences due to noise are of relatively short duration and as long as all practical measures are being implemented to reduce the effects of noise-producing activities.

3.3.4.2 Environmental Consequences

VEA expects the use of the stringing helicopter and the twin prop helicopter installing approximately 5 poles to increase ambient noise levels on a temporary basis. No sensitive receptors or residences are in the vicinity of the ROW. The helicopters would fly only over public land managed by the BLM, and the pilot would make an effort to avoid any residential areas en route to the ROW. The helicopter would be operated only during the daylight hours. Therefore, no significant impacts would result from the Proposed Action. This resource is not analyzed further in this EA.

3.3.5 Threatened and Endangered Species

3.3.5.1 Affected Environment

Of 20 federally listed threatened or endangered species that are present or might be present in Nye County, Nevada (USFWS 2013a), only the desert tortoise is known to be present within and near the distribution line route. The other threatened or endangered species that could be present in Nye County are two birds associated with wetlands and riparian areas, nine fish, seven plants found at Ash Meadows, and one insect found at Ash Meadows. The distribution line is outside the range of all of these listed plants, fish, and insects and does not cross wetlands or riparian vegetation that would be used by the two bird species.

The southern half of the distribution line route, from Beatty to about structure 208, is within or adjacent to potential desert tortoise habitat. Surveys for desert tortoises were conducted along the entire distribution line route from June 2 to June 10, 2010, and from August 19 to August 25, 2010 (Converse Consultants 2010). No tortoises or signs of tortoises were found during the surveys.

During initial preconstruction for this Project, starting on May 13, 2013, through August 15, 2013, 30 tortoises were observed along and near the southern portion of the distribution line in Oasis Valley by biologists monitoring the construction activities. Three of those tortoises were within active construction areas and were relocated to nearby undisturbed areas to ensure that they would not be harmed during construction (SNEI 2013).

The Project is covered under the *Programmatic Biological Opinion (PBO) for the Implementation of Proposed Actions within the Desert Tortoise Habitat Administered by the Bureau of Land Management (BLM), Tonopah Field Office, Nye County, Nevada* (USFWS 2013b). In the PBO, the USFWS estimated that 50 or fewer desert tortoises would be incidentally taken over the 10-year term of the PBO. Since the issuance of the PBO no desert tortoises have been taken.

BLM Sensitive Species

The BLM's policy for management of special-status species is in the BLM Manual, Section 6840. Special-status species include the following:

- Federally Threatened or Endangered Species: Any species that the USFWS has listed as an endangered or threatened species under the Endangered Species Act of 1973 (ESA), as amended, throughout all or a significant portion of its range.

- Proposed Threatened or Endangered Species: Any species that the USFWS has proposed for listing as a federally endangered or threatened species under the ESA.

- Candidate Species: Plant and animal taxa that are under consideration for possible listing as threatened or endangered under the ESA.

- BLM Sensitive Species: (1) Species that are currently under status review by the USFWS; (2) species whose numbers are declining so rapidly that federal listing might become necessary; (3) species with typically small and widely dispersed populations; or (4) species that inhabit ecological refugia or other specialized or unique habitats.

- State of Nevada Listed Species: State-protected animals that have been determined to meet BLM's Manual 6840 policy definition.

Nevada BLM policy is to provide State of Nevada–listed species and Nevada BLM sensitive species with the same level of protection as is provided to candidate species in the BLM Manual, Section 6840.06C. Per the wording in Table IIa in BLM Information Bulletin NV-2003-097, Nevada protected animals that meet BLM's Section 6840 policy definition are those species of animals present on BLM-managed lands in Nevada that: (1) are "protected" under the authority of the Nevada Administrative Code; (2) have been determined to meet BLM's policy definition

of "listing by a state in a category implying potential endangerment or extinction"; and (3) are not already included as federally listed, proposed, or candidate species.

In June and August 2010, Converse Consultants surveyed for BLM sensitive species within the ROW and performed an evaluation. Converse identified several BLM sensitive species that have the potential to be present within the ROW. In addition to the desert tortoise, the only other sensitive reptile species with the potential to be present is the banded Gila monster (*Heloderma suspectum cinctum*), which is a State of Nevada and BLM sensitive species. At the initiation of the biological baseline work for the Project, the Armargosa toad (*Anaxyrus nelsoni*) was determined to be not warranted for listing in its range. In addition, several sensitive mammals (including bats), birds, and plant species are expected to be present. A complete list of the special-status species with the potential to be present is included in Appendix B.

3.3.5.2 Environmental Consequences

Completion of the distribution line would require additional driving and ground-disturbing activities within desert tortoise habitat that is along and near the southern portion of the distribution line route from Beatty through Oasis Valley.

It is likely that VEA would find additional desert tortoises within construction sites during the remainder of construction activities and would have relocate the tortoises to adjacent areas to avoid harming them. All tortoises relocated would be handled and moved in accordance with USFWS-approved procedures to ensure that the tortoises are not harmed while being relocated. It is also possible, but unlikely, that a tortoise would be harmed or killed during construction activities. Such an incidental take of a tortoise would be authorized under the *BLM Programmatic Biological Opinion for Implementation of Proposed Actions within Desert Tortoise Habitat Administered by the [BLM], Tonopah Field Office, Nye County, Nevada*. Measures required by that biological opinion, and additional measures listed in Section 2.1.15.9, would be implemented to minimize the risk of tortoises being harmed or injured during the Project.

3.3.6 Vegetation

3.3.6.1 Affected Environment

A biological survey was conducted by a contractor, in concert with the BLM, to determine the effects that the VEA Beatty to Tolicha Peak power line upgrade would have on biological resources. This survey was conducted from June 2 to June 10, 2010, and from August 19 to August 25, 2010. The survey found that the vegetation over the Project area consisted predominantly of Mojave Desert shrubland and salt desert shrubland, which is characterized most importantly by its elevation, gentle slopes, and dominant vegetation. The area is dominated by the Sonora-Mojave Cresote Bush-White Bursage Desert Scrub (creosote bush) Community. The creosote bush community, in which white bursage (*Ambrosia dumosa*) commonly co-dominates with creosote bush, occurs on alluvial slopes, valley floors, and mountain slopes below 4,000 feet above msl. This community is usually found on well-drained soils, forming a continuous layer, except on the rockiest slopes, washes, saltbush flats, and dry lakebeds.

A list of plant species potentially found in association with the Project site is provided in *VEA Beatty to Tolicha Peak Power Line Upgrade Biological Assessment, Nye County, October, 2010*. This document is located in the TFO and can be viewed on request.

3.3.6.2 Environmental Consequences

The Proposed Action would not exceed the disturbance to vegetation analyzed within the ROW analyzed in the 2011 EA (208.86 acres). The Proposed Action activities would occur within the same vegetation communities. None of the vegetation communities are considered sensitive. Therefore, the Proposed Action would not affect vegetation resources beyond what was analyzed in the 2011 EA.

3.3.7 Visual Resources

3.3.7.1 Affected Environment

The Project is within a Class IV visual resource area. Class IV visual resource management (VRM) areas total 88.7% of the Tonopah Planning area. The visual effects of the facilities and operations of the Proposed Action were evaluated with respect to conformance with the established VRM Class IV. Class IV is the least restrictive of the four management classes. A management activity in this class could draw attention as a dominant feature in the landscape, but attempts should be made to minimize the contrast by repeating the form, line, color, and texture of the characteristic landscape (BLM 1986).

From Springdale north along the proposed route, the new 24.9-kV line would parallel the existing 24.9-kV line (Nev 066289), thus adding to the visual impact in this area. Portions of the existing line, Nev 066289, from the Beatty substation north to the Tolicha Peak turnoff would be removed and replaced by the new line.

To the casual observer, the added line and cable would not be noticed, thus there would be no substantive change in the visual effects of that existing distribution line. Figure 7 is a VRM map depicting the Class IV area of the Project and the key observation points (KOPs) used for the analysis. Figures 8 and 9 are photosimulations of the visual effects of the double-pole structures and wood monopole line.

3.3.7.2 Environmental Consequences

Based on the photosimulations of the double-pole structures, they are similar in contrast, line, color, and texture to the single-pole structures analyzed in the 2011 EA. Therefore, the Proposed Action would not affect Class IV resources within the Project area and vicinity. This resource is not analyzed further in this EA.

Figure 7: Map of Key Observation Points

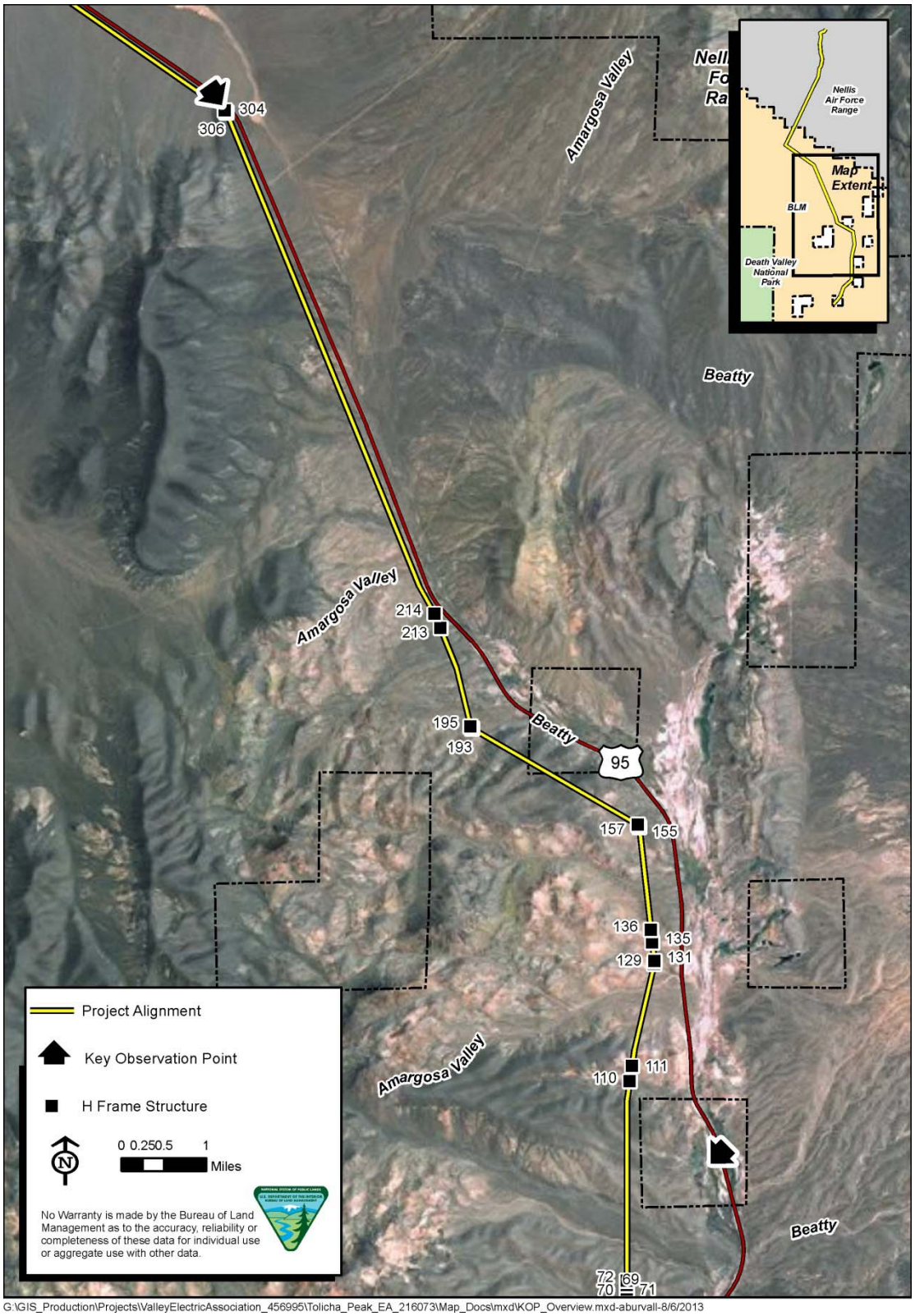

G:\GIS_Production\Projects\ValleyElectricAssociation_456995\Tolicha_Peak_EA_216073\Map_Docs\mxd\KOP_Overview.mxd-aburvall-8/6/2013

Figure 8: KOP #1 South Alignment

Figure 9: KOP #2 North Alignment

3.3.8 Wildlife

3.3.8.1 Affected Environment

A biological survey was conducted by a contractor, in concert with the BLM, to determine the effects the VEA Beatty to Tolicha Peak power line upgrade on biological resources. This survey was conducted from June 2 to June 10, 2010, and from August 19 to August 25, 2010. General wildlife use in the area is consistent with species adapted to the Mojave Desert environment.

3.3.8.2 Environmental Consequences

No additional direct impacts to wildlife would result from the Proposed Action above what was analyzed in the 2011 EA. Indirect effects to wildlife would be an increase in noise and disturbance associated with the helicopter use. This impact would be temporary and short-lived and is not considered significant.

3.4 Effects of the No Action Alternative

Under the No Action Alternative, none of the impacts associated with the Proposed Action would occur, since the Proposed Action would not be implemented. However, VEA would continue authorized construction, operations, and maintenance of the 24.9-kV line as described in the 2011 POD and EA and incorporating the ROW grant stipulations and mitigation measures included in the DR signed on April 26, 2011. VEA is currently approved for 208.86 acres of disturbance. Impacts associated with this activity, which are presented in environmental assessment DOI-BLM-NV-B020-2010-0101-EA (BLM 2011), would be similar in nature and proportionately equivalent to the Proposed Action.

4 CUMULATIVE EFFECTS

4.1 Introduction

As required under the NEPA and the regulations implementing NEPA, this section analyzes potential cumulative impacts from past, present, and reasonably foreseeable future actions (RFFAs) combined with the Proposed Action within the area analyzed for impacts in Chapter 3 specific to the resources for which cumulative impacts are anticipated.

A cumulative impact is defined as "the impact which results from the incremental impact of the action, decision, or project when added to other past, present, and reasonably foreseeable future actions, regardless of what agency (federal or non-federal) or person undertakes such other actions. Cumulative impacts can result from individually minor but collectively significant actions taking place over a period of time" (40 CFR 1508.7).

As required under the NEPA and the regulations implementing NEPA, this chapter addresses those cumulative effects on the environmental resources in the Cumulative Effects Study Area (CESA), which could result from the implementation of the Proposed Action and No Action Alternative, past actions, present actions, and RFFAs. The extent of the CESA was defined based on the geographic extent of the resources being analyzed. The length of time for cumulative effects analysis would vary according to the duration of impacts from the Proposed Action on a particular resource. For example, disturbance to soils, vegetation, and biological resources would primarily occur during the construction phase of the Project, but impacts to visual resources would be approximately 50 years, which is the approximate lifespan of the distribution line and fiber optic line before it would need to be replaced.

This chapter presents the past and present activities that have been reported in the CESA, the RFFAs that have been identified in the CESA. These impacts are quantified when possible and the resulting analysis adds these impacts to the environmental consequences identified in Chapter 3 for the Proposed Action. The activities were identified using the BLM's Legacy Rehost database (LR2000) to identify past approved and pending actions that could have an impact to the resources being analyzed. The LR2000 database was queried on August 13, 2013; therefore, any actions added to the LR2000 database after August 14, 2013 are not included in the analysis.

Based on the preceding analysis in Chapter 3 of this EA, the Proposed Action would not impact the following resources and would not therefore have cumulative impacts: cultural resources, land use authorizations, noise, and visual resources. These resources are not discussed further in the cumulative impacts section.

Cumulative impacts are analyzed for the following resources: migratory birds, soils, special status species (including threatened and endangered species), vegetation, and wildlife.

One geographical area has been identified for the analysis of cumulative effects. This CESA includes the Sarcobatus Flat and Oasis Valley watershed subbasins as shown on Figure 10. This CESA measures approximately 808,197 acres.

Figure 10: Cumulative Effects Study Area Map

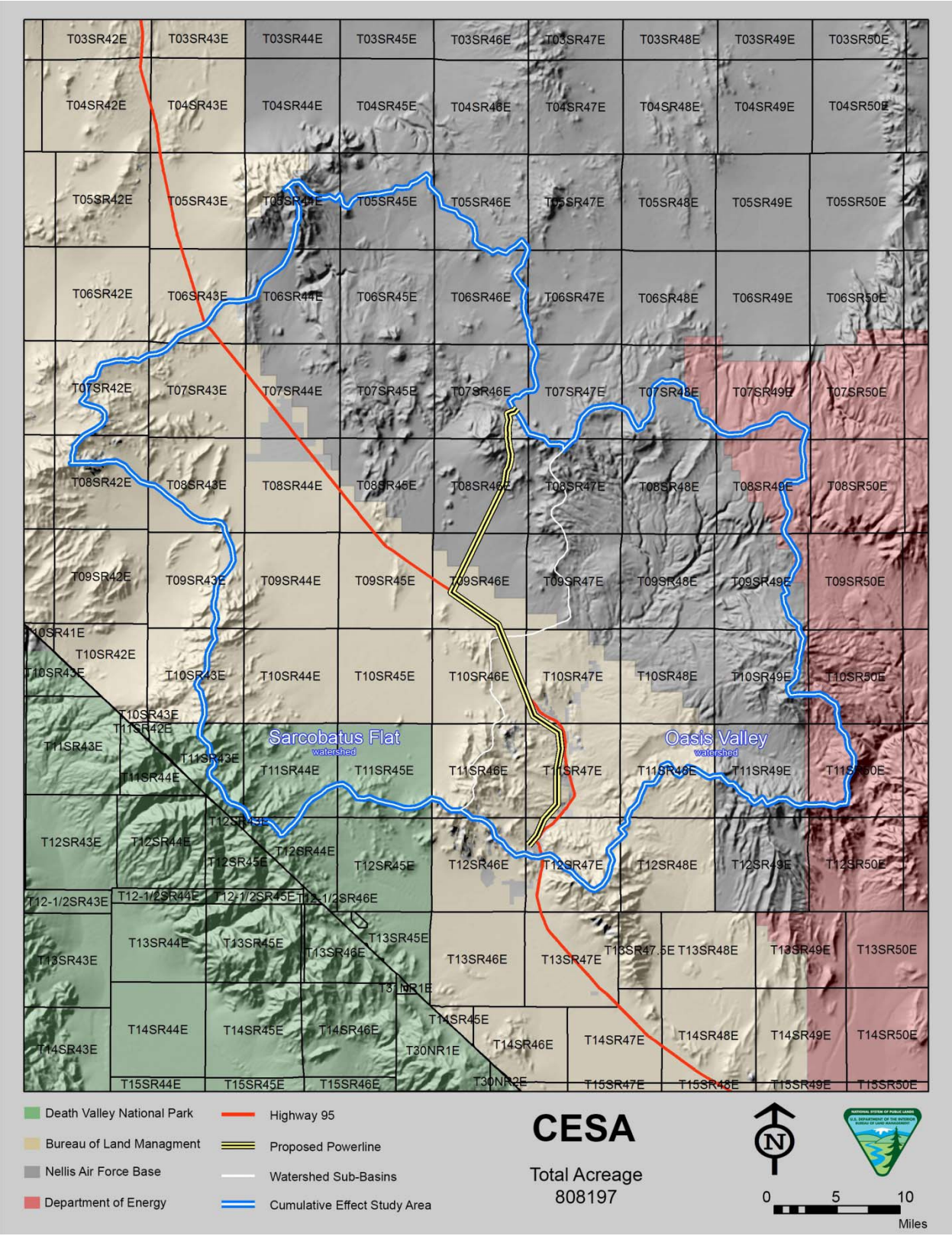

4.2 Past and Present Actions

Past actions in the CESA include historic mining, mineral exploration, dispersed recreation, organized off-road racing and residential occupation, habitat rehabilitation programs, department of defense activities, powerlines, other ROWs, and residential and urban development.

Present actions in the CESA include mineral exploration, quarry operations, roads, powerlines, other ROWs, dispersed recreation, off-road racing, and residential and urban development. In addition, the town of Beatty is located within the CESA and other smaller residential developments. Highway 95 alignment within the CESA is approximately 60 miles long and represents an ongoing disturbance regime. Table 6 summarizes the approved ROWs within the CESA and Table 7 summarized the approved mineral exploration and mining activities in the CESA.

Table 6: Past and Present Rights-of-Way Acres in the CESA

ROW Type	Acres in CESA
Roads and Highways	227
Telecommunications	2,479
Power Transmission	25,800
Communication Sites	123
Irrigation/Water Facilities and Pipelines	166
Other	15,576
Total	**44,143**

Table 7: Past and Present Mineral Exploration and Mining Activities in the CESA

Type of Authorization	Acres of Disturbance in CESA
Authorized and Closed Notices	229
Authorized and Closed Plans of Operation	2,712
Total	**2,941**

4.3 Reasonably Foreseeable Future Actions

RFFAs, in addition to the Proposed Action, in the CESA include mineral exploration and mining activities, a continuation of dispersed recreation, wildfires, off-road race events and road use, Department of Defense activities, Highway 95 disturbance, and continued occupation by residents in the Beatty and Armargosa River area. In addition, approximately 631 acres of pending ROW projects and 243 acres of mining and exploration projects are located within the CESA.

4.4 Evaluation of Cumulative Impacts

4.4.1 Migratory Birds, Special Status Species, Vegetation, Wildlife

Past and Present Actions: Past and present actions within the CESA that could have an impact on migratory bird habitat, special status species habitat, vegetation, and wildlife and their habitat are dispersed recreation, off-road races, utilities and other ROWs, mineral exploration, and mining. In addition, wildfires in the CESA represent another past disturbance to habitat and biological resources. Examples of impacts to habitat and vegetation include destruction of habitat associated with facility and urban develop, disruption from human presence or noise from

Highway 95 and Department of Defense activities. There are no specific data that quantify impacts to vegetation, wildlife and wildlife habitat, special status animal species habitat, migratory bird habitat as a result of recreational activities. However, impacts to from recreational activities would include destruction of native vegetation or nesting areas from off-road vehicles that traveled off of established roadways.

Approved or closed mining and mineral exploration Notices or plans of operations, or state reclamation plans total 2,941 acres within the CESA; however, it is reasonable to assume that the majority of those acres from authorized plans of operations, authorized and expired notices, and mineral material sites have been or will be reclaimed since state and federal regulations require reclamation, also that some areas have naturally revegetated over time. Therefore, once the disturbance associated with these operations has been reclaimed and revegetated, impacts to vegetation and habitat would no longer contribute to a cumulative effect. Approximately 44,143 acres of surface disturbance for ROWs were issued within the CESA that had the potential to create surface disturbance and disturb vegetation, wildlife and wildlife habitat, soils, special status animal species habitat, or migratory bird habitat.

Disturbance to vegetation, wildlife and wildlife habitat, soils, special status animal species habitat, and migratory bird habitat from past and present actions would have been reduced through reclamation and seeding of disturbed areas and natural recolonization of native species. The past and present actions that are quantifiable have disturbed up to 5.8 percent of the CESA.

RFFAs: Potential impacts to vegetation, wildlife and wildlife habitat, soils, special status species habitat, migratory bird habitat from dispersed recreation, off-road races, roads, ROWs, or minerals activities could occur. There are no specific data on the potential impacts to wildlife, soils, special status species, migratory birds or their habitat as a result of dispersed recreation. Approximately 631 acres of pending ROW projects and 243 acres of mining and exploration projects were reported in the LR2000 database within the CESA.

4.4.2 Proposed Action

The Proposed Action represents a modification to the previously approved and analyzed would not increase the level of impacts on the resources analyzed in in the 2011 EA.

Impacts to vegetation, wildlife and wildlife habitat, soils, special status species habitat, migratory bird habitat from the Proposed Action would not exceed the disturbance previously approved and analyzed in the 2011 EA of up to 208.86 acres or 0.02 percent of the CESA. The majority of the Project impacts to these resources would be limited to the removal of vegetation during construction activities or temporary alteration of habitat, and noise associated with Project related activities. These impacts would be localized and minimized due to implementation of environmental protection measures outlined in Section 2.1.2 and measures required by the BLM. Other potential impacts include direct impacts to wildlife from the operations of the powerline. However, an existing powerline is present within the ROW area and therefore minimizes the potential for wildlife interaction with the facilities. Further, the Proposed Action includes additional resource protection measures to protect raptors and birds. Quantifiable past and present actions and RFFA disturbance in the CESA is 47,958 acres, which is an impact of up to approximately 5.93 percent of the total CESA (808,197 acres). When combined with the Project disturbance, approximately 5.95 percent of the CESA would be cumulative impacts. Based on the above analysis and findings, incremental impacts to vegetation, wildlife and wildlife habitat,

soils, special status species habitat, and migratory bird habitat as a result of the Project when added to the past and present actions and RFFAs would be minimal.

4.4.3 No Action Alternative

The No Action Alternative would also consist of the same types of impacts to vegetation, wildlife and wildlife habitat, soils, specials status species habitat, migratory bird habitat as the Proposed Action. Since the Proposed Action would not disturb more than the previously authorized 208.86 acres of disturbance, the cumulative impacts associated with the Proposed Action alternative are the same as the No Action Alternative. However, the Proposed Action includes additional resource protection measures for raptors and migratory birds. Therefore, the No Action Alternative would potentially have a greater, but immeasurable impact to biological resources than the Proposed Action.

5 CONSULTATION AND COORDINATION

Persons, Groups, and Agencies Consulted

5.1 Preparers and Reviewers

Name	Title	EA Area of Responsibility
Bureau of Land Management, Battle Mountain District, Tonopah Field Office		
Wendy Seley	Realty Specialist	Project Lead
Mark Ennes	Assistant Field Manager	NEPA Compliance
Susan Rigby	Archaeologist	Cultural Resources
Timothy Coward	Acting Field Manager	Project Oversight
Dustin Hollowell	Biologist	Biological Resources
HDR Engineering, Inc.		
Dr. Kurt Rautenstrauch	Senior Ecologist	Special Status Species, Threatened and Endangered Species
Melissa Sherman	NEPA Specialist	EA Document Preparation
Henrik Christensen	Project Manager	Project Management, Reviewer, Quality Control
Anders Burvall	GIS Specialist	EA Figures
Rick Lovel	Visualization Manager	Visual Resources
Derek Norpchen	Multimedia Developer	Visual Resources
Amanda Ligman	Multimedia Developer	Visual Resources
Valley Electric Association		
Kristin Mettke	Engineering Manager	Project Oversight, Reviewer
Jason Higgins		

6 LITERATURE CITED

[APLIC] Avian Power Line Interaction Committee. 2006. *Suggested Practices for Avian Protection on Power Lines: The State of the Art in 2006*. Edison Electric Institute, APLIC, and the California Energy Commission. Washington, DC, and Sacramento, CA.

[BLM] Bureau of Land Management. 1986. *Visual Resources Management*, Section 8431:1, Visual Resource Contrast Rating.

———. 2011. *Environmental Assessment – Valley Electric Association, 24.9 kV Distribution Line Project, Beatty to Tolicha Peak*. Environmental Assessment No. DOI-BLM-NV-B-020-2010-0101-EA. March.

[CEQ] Council on Environmental Quality. 1978.

Converse Consultants, Inc. 2010. *Biological Assessment, VEA Beatty to Tolicha Peak Power Line Upgrade, Nye County, Nevada*. October 8.

[EPA] U.S. Environmental Protection Agency. 1974. *Information on Levels of Environmental Noise Requisite to Protect Public Health and Welfare with an Adequate Margin of Safety*. EPA/ONAC 550/974004. March.

Nye County. 2011. *Nye County Comprehensive Master Plan*. Board of County Commissioners. June 7.

SNEI. 2013. Beatty to Tolicha Peak CIC Weekly Report. Grant File Numbers N-088360 and N-88568. Week Ending June 29, 2013.

[USFWS] United States Fish and Wildlife Service. 2013a. *Endangered Species Act List for Nye County, Nevada*. Retrieved from the Information, Planning, and Conservation System. August 2.

_____. 2013b. *Programmatic Biological Opinion (PBO) for the Implementation of Proposed Actions within the Desert Tortoise Habitat Administered by the Bureau of Land Management (BLM), Tonopah Field Office, Nye County, Nevada*. File No. 1-5-01-F-570. June 26.

APPENDIX A

Existing ROW Grant Stipulations and Mitigation Measures

APPENDIX A
STIPULATIONS

General Stipulations

1. In case of change of address, the holder shall immediately notify the BLM Authorized Officer.

2. In accordance with Federal regulations in 43 CFR 2807.21 any proposed transfer of any right or interest in the right-of-way grant shall be filed with the BLM Authorized Officer. An application for assignment shall be accompanied by a showing of qualifications of the Assignee. The assignment shall be supported by a stipulation that the Assignee agrees to comply with and to be bound by the terms and conditions of the grant to be assigned. No assignment shall be recognized unless and until it is approved in writing by the Authorized Officer.

3. This grant is subject to all valid rights existing on the effective date of this grant.

4. In the event that the public land underlying the right-of-way (ROW) encompassed in this grant, or a portion thereof, is conveyed out of Federal ownership and administration of the ROW or the land underlying the ROW is not being reserved to the United States in the patent/deed and/or the ROW is not within a ROW corridor being reserved to the United States in the patent/deed, the United States waives any right it has to administer the right-of-way, or portion thereof, within the conveyed land under Federal laws, statutes, and regulations, including the regulations at 43 CFR Part [2800][2880], including any rights to have the holder apply to BLM for amendments, modifications, or assignments and for BLM to approve or recognize such amendments, modifications, or assignments. At the time of conveyance, the patentee/grantee, and their successors and assigns, shall succeed to the interests of the United States in all matters relating to the right-of-way, or portion thereof, within the conveyed land and shall be subject to applicable State and local government laws, statutes, and ordinances. After conveyance, any disputes concerning compliance with the use and the terms and conditions of the ROW shall be considered a civil matter between the patentee/grantee and the ROW holder.

5. Future modifications, construction of improvements, or major maintenance operations involving disturbance of the land, shall not occur until plans for such actions have been submitted and approved in writing by the Authorized Officer. Any proposals involving new surface disturbance shall require a cultural inventory and may require completion of an environmental assessment.

6. The holder shall permit free and unrestricted public access to and upon the right-of-way for all lawful purposes, except for those specific areas designated as restricted by the Authorized Officer to protect the public, wildlife, livestock, or facilities constructed within the right-of-way.

Pre-construction/Construction Requirements
Submission of Plans, Third Party Compliance Program and Permits

7. The Authorized Officer may suspend or terminate in whole, or in part, any notice to proceed which has been issued when, in his judgment, unforeseen conditions arise which result in the approved terms and conditions being inadequate to protect the public health and safety or to protect the environment.

8. The holder shall not initiate any construction or other surface disturbing activities on the right-of-way without the prior written authorization of the Authorized Officer. Such authorization shall be a written notice to proceed issued by the Authorized Officer. Any notice to proceed shall authorize construction or use only as therein expressly stated and only for the particular location or use therein described.

9. The holder shall construct, operate, and maintain the facilities, improvements, and structures within this right-of-way in strict conformity with the approved Plan of Development, as amended or supplemented by approval of the Authorized Officer. Any surface disturbing activity, additional construction, or use that is not in accord with the approved Plan of Development shall not be initiated without the prior written approval of the Authorized Officer. A copy of the complete right-of-way lease/grant, including all stipulations and approved Plan of Development, shall be made available on the right-of-way area during construction, operation, and decommissioning. Noncompliance with the above will be grounds for immediate temporary suspension of activities if it constitutes a threat to public health or safety or the environment.

Third Party Contracting [Construction Inspector Contractor (CIC)]

10. The holder shall designate a representative who shall have the authority to act upon and to implement instructions from the Authorized Officer. The holder's representative shall be available for communication with the Authorized Officer within a reasonable time when construction or other surface disturbing activities are underway.

11. The holder shall fund and implement a third party Compliance Program with the Authorized Officer. The Program will include the holder hiring an independent third-party Compliance Inspection Contractor, to be approved by the Authorized Officer, to insure compliance with the terms, conditions and stipulations of this lease/grant, N-88360. All questions or concerns regarding compliance with the terms, conditions, and stipulations of this right-of-way lease/grant shall be directed to the Authorized Officer.

12. The holder will arrange and attend preconstruction conference(s) prior to the holder's commencing construction and/or surface disturbing activities on the right-of-way or specific construction phase of the right-of-way as specified by the Authorized Officer. The holder and/or his representatives will attend this conference. The holder's contractor, or agents involved with construction and/or any surface disturbing activities associated with the right-of-way, will also attend this conference to review the stipulations of the authorization, including the Plan of Development, as applicable. The holder shall notify the Authorized Officer of the schedule for any preconstruction conference at least 10 calendar days in advance of the preconstruction conference or such timeframe as may be required by the Notice to Proceed.

Human Health and Safety

13. Construction sites shall be maintained in a sanitary condition at all times; waste materials at those sites shall be disposed of promptly at an appropriate waste disposal site. 'Waste' means all discarded matter including, but not limited to, human waste, trash, garbage, refuse, oil drums, petroleum products, ashes, and equipment. A litter policing program shall be implemented by the holder which covers all roads and sites associated with the right-of-way.

14. The holder shall comply with all applicable Federal, State, and local laws and regulations, existing or hereafter enacted or promulgated, with regard to any hazardous materials, as defined by 43 CFR 2801.5 that will be used, produced, or transported on or within the right-of-way, or

used in the construction, operation, maintenance, or decommissioning of the right-of-way or any of its facilities.

The holder agrees in accordance with 43 CFR 2807.12(e) to fully indemnify the United States against any liability arising from the release of any hazardous substance or hazardous waste (as these terms are defined in the Comprehensive Environmental Response, Compensation and Liability Act of 1980, 42 U.S.C. 9601 et seq., or the Resource Conservation and Recovery Act of 1976, 42 U.S.C. 6901 et seq.) on the right-of-way (unless the release or threatened release is wholly unrelated to the right-of-way holder's activity on the right-of-way). This agreement applies without regard to whether a release is caused by the holder, its agent, or unrelated third parties.

The holder shall immediately report any release of hazardous substances (leaks, spills, etc.) caused by the holder or third parties in excess of the reportable quantity as required by federal, state, or local laws and regulations. A copy of any report required or requested by any federal, state or local government agency as a result of a reportable release or spill of any hazardous substances shall be furnished to the Authorized Officer concurrent with the filing of the reports to the involved federal, state or local government agency.

The holder shall immediately notify the Authorized Officer of any release of hazardous substances, toxic substances, or hazardous waste on or near the right-of-way or potentially affecting the right-of-way of which the holder is aware.

As required by law, the holder shall have responsibility for and shall take all action(s) necessary to fully remediate and address the hazardous substance(s) on or emanating from the right-of way.

15. The holder will ensure that the all health and safety and emergency plans to be required for employees and contractors during construction, operations, and decommissioning of the authorized facility will comply with the Occupational Safety and Health Standards provided in federal regulation 29 CFR, Part 1910, as well as with applicable state and local occupational health and safety regulations.

16. The holder shall mark the exterior boundaries of the right-of-way with stake and/or lath at 100 to 200 foot intervals prior to site mobilization. The intervals may be varied at the time of staking at the discretion of the Authorized Officer. The tops of the stakes and/or laths will be painted and the laths flagged in a distinctive color as determined by the holder. The holder shall maintain all boundary stakes and/or laths in place during construction and until final cleanup and restoration is completed.

17. All design, material, and construction, operation, maintenance, and termination practices shall be in accordance with safe and proven engineering practices.

18. The holder shall conduct all activities associated with the construction, operation, and termination of the right-of-way within the associated limits of the right-of-way.

19. The holder shall protect all survey markers found within the right-of-way. Survey markers include, but are not limited to, Public Land Survey System line and corner markers, other property boundary line and corner markers, and horizontal and vertical geodetic monuments. In the event of obliteration or disturbance of any of the above, the holder shall immediately report the incident, in writing, to the Authorized Officer and the respective installing authority if

known. Where any of the above survey markers are obliterated or disturbed during operations, the Authorized Officer will determine how the marker is to be restored.

The holder will be instructed to secure the services of a registered land surveyor or informed that an official survey will be executed by the Bureau of Land Management (BLM). All surveying activities will be in conformance with the Manual of Surveying Instructions and appropriate State laws and regulations. Surveys by registered land surveyors will be examined by the Authorized Officer and the BLM State Office Chief Cadastral Surveyor for conformance with the Manual of Surveying Instructions and State laws and regulations before being filed in the appropriate State or county offices of record. The holder shall be responsible for all administrative and survey costs.

20. During the period of May 1 through October 1 of each year, Holder should consider using spark arresters on vehicles and equipment in the project area, due to the potential for fire ignition from project related activities. This includes emission of hot carbon particles from diesel powered equipment, improperly equipped or poorly operating exhaust systems on gas powered vehicles and direct contact of wildland fuels with catalytic converters. Individuals, groups, businesses or corporations found responsible for the ignition of a wild fire may be held liable for the costs associated with the suppression of that fire.

Hazardous Materials
Pesticides

21. Use of pesticides and herbicides shall comply with all applicable Federal and State laws. Pesticides and herbicides shall be used only in accordance with their registered uses within limitations imposed by the Secretary of the Interior. Prior to the use of the pesticides, the holder shall obtain from the Authorized Officer, written approval of a Pesticide Use Proposal Plan showing the type and quantity of material to be used, pest(s) to be controlled, method of application, locations of storage and disposal of containers, and any other information deemed necessary by the Authorized Officer.

22. Only those chemicals (pesticides and herbicides) listed on the BLM approved label list are authorized for use on public lands. A Pesticide Use Proposal must be submitted for each chemical used, and it cannot be used until approval has been obtained in writing from the Authorized Officer. The proposal needs to identify any surfactants or dyes used in the spraying operation. Applicator(s) of chemicals used must have completed pesticide certification training and have a current up to date Certified Pesticide Applicator's License. Pesticide and herbicide application records for the areas and acres treated must be submitted to the Authorized Officer each year for the life of the project including the site restoration and reclamation periods. This includes the following:

    Identify target species to be treated
    Brand or Product name
    EPA registration number
    Total amount applied (use rate #A.I./acre)
    Date of application
    Location of application
    Size of area treated
    Method of treatment (air/ground)
    Name of applicator
    Certification number and dates

Costs to treatment
Amount of surfactants or dyes used in spraying operation

The record information must be recorded no later than 14 calendar days following the pesticide or herbicide application and must be maintained for ten years.

23. Holder shall remove only the minimum amount of vegetation necessary for the construction of structures and facilities. Where possible and if needed, topsoil shall be conserved during excavation and reused as cover on disturbed areas to facilitate regrowth of vegetation.

24. The Holder shall be responsible for weed control on disturbed areas within the limits of the right-of-way. The Holder is responsible for consultation with the Authorized Officer and/or local authorities for acceptable weed control methods (within limits imposed in the grant stipulations).

Cultural

25. Any cultural resource (historic or prehistoric site or object) discovered by the holder, or any person working on his behalf, on public or Federal land shall be immediately reported to the Authorized Officer. The holder shall suspend all operations in the immediate area of such discovery until written authorization to proceed is issued by the Authorized Officer. An evaluation of the discovery will be made by the Authorized Officer to determine appropriate actions to prevent the loss of significant cultural or scientific values. The holder will be responsible for the cost of evaluation and any decision as to proper mitigation measures will be made by the Authorized Officer after consulting with the holder.

    The holder shall immediately notify the BLM Authorized Officer of any paleontological resources discovered as a result of operations under this authorization. The holder shall suspend all activities in the vicinity of such discovery until notified to proceed by the Authorized Officer, and shall protect the locality from damage or looting. The Authorized Officer will evaluate, or will have evaluated, such discoveries as soon as possible, but not later than 5 working days after being notified. Appropriate measures to mitigate adverse effects to significant paleontological resources will be determined by the Authorized Officer after consulting with the holder. The holder is responsible for the cost of any investigation necessary for the evaluation and for any mitigation measures, including museum curation.

    The holder may not be required to suspend operations if activities can avoid further impacts to a discovered locality or be continued elsewhere, however not suspending operations must be approved by the Authorized Officer.

    Although unlikely, any human remains that may be discovered during authorized activities shall be protected by all Project personnel and construction crew members by following the procedures set forth in Section VI of the October 26, 2009, State Protocol Agreement between the BLM and the Nevada State Historic Preservation Office. This includes at a minimum: 1) it is the responsibility of the holder to notify the BLM authorized contracting officer and archaeologist immediately, 2) cease all construction activities within a 100 meter buffer area, and 3) to ensure protection of the discovery from further damage or vandalism until a BLM-authorized archaeologist evaluates the nature of the materials. If needed, mitigation procedures will be developed by the BLM in consultation with the State Historic Preservation Office.

GIS requirements

26. Within 120 calendar days of completion of construction, the holder shall submit to the Authorized Officer, as-built drawings and a certification of construction verifying that the facility has been constructed in accordance with the design, plans, specifications, and applicable laws and regulations.

    Within 90 days of construction completion, the holder shall provide the Authorized Officer with data in a format compatible with the Bureau's Arc-Info Geographic Information System to accurately locate and identify the right-of-way:

    Acceptable data formats are:
    Corrected Global Positioning System files with sub-meter accuracy or better, in UTM NAD 83; Zone 11;
    ARCGIS export files on a CD ROM, shapefile, geodatabase.

    Data may be submitted in any of the following formats:
    ARCGIS interchange, shapefile or geodatabase format.
    CD ROM in compressed or uncompressed format.

    All data shall include metadata for each coverage, and conform to the Content Standards for Digital Geospatial Metadata Federal Geographic Data Committee standards. Contact the GIS Department at (775) 482-7800.

Biological and Wildlife

27. All power lines shall be designed, installed, and constructed to be avian-safe in accordance with the standards outlined in "Suggested Practices for Avian Protection on Power Lines: the State of the Art in 2006" (APLIC 2006). Unless otherwise agreed to in writing by the Authorized Officer, power lines shall also be constructed in accordance with standards outlined in "Suggested Practices for Raptor Protection on Powerlines", Raptor Research Foundation, Inc., 1996. The holder shall assume the burden and expense of proving that pole designs not shown in the raptor protection publication are "eagle safe."

28. All ground-disturbing activities will be conducted outside the migratory bird nesting season (March 15 – August 31). If ground-disturbing activities cannot be avoided during this time period, pre-construction nest surveys shall be conducted by a BLM-approved biological monitor with the following guidelines:

    For all non-raptor bird species, surveys shall cover all potential nesting habitat in and within 100 feet of the area to be disturbed.

    Surveys must be conducted between sunrise and 3 hours post-sunrise when birds are most active.

    Active bird nests will not be moved during the breeding season unless the holder is expressly permitted to do so by the USFWS, BLM, and NDOW.

    All active nests and disturbance or harm to active nests will be reported within 24 hours to the USFWS, the BLM, and NDOW upon detection. The biological monitor will halt work if it is determined that active nests are being disturbed by construction activities, until further direction or approval to work is obtained from the appropriate agencies.

29. The holder shall ensure that all steep-walled trenches, auger holes, or other excavations are covered at the end of each day. Fencing will be maintained around the covered excavations at night. For open trenches, earthen escape ramps will be maintained at intervals of no greater than 0.25 mile. A biological monitor will inspect all trenches, auger holes, or other excavations a minimum of twice per day, and also immediately prior to back-filling. Any species found will be safely removed and relocated out of harm's way, using a pool net when applicable. For safety reasons, biological monitors will, under no circumstance, enter open excavations.

30. The holder shall consult with the BLM, USFWS, and NDOW regarding conservation measures to be implemented to avoid impacts on desert bighorn sheep during construction. Avoidance and minimization measures could include such elements as preconstruction surveys, biological monitoring, and timing construction activities to avoid bighorn sheep active seasons.

Desert Tortoise Stipulations

31. A desert tortoise awareness program shall be provided to all project workers onsite, which may be in the form of a pamphlet. The program will include, but not be limited to: discussion of the Act and the consequences of noncompliance with it; hazardous substance spill prevention and containment measures; and whom to contact if a desert tortoise is observed. Additionally, it will include information on the life history of the desert tortoise, legal protection for desert tortoises, penalties for violations of Federal and State laws, general tortoise activity patterns, reporting requirements, measures to protect tortoises, and Terms and Conditions of the biological opinion.

32. In the unlikely event that a desert tortoise or a desert tortoise nest is discovered, construction activities in the immediate area should cease until an authorized desert tortoise biologist moves the tortoise out of harm's way or the nest is relocated. Burrows containing tortoises or nests will be excavated by hand, with hand tools, to allow removal of the tortoise or eggs. Ground disturbance in the area should not resume until approval is received from the tortoise biologist.

33. All potential desert tortoise burrows shall be flagged and avoided by all project vehicles, equipment, and activities. At the conclusion of project activities, flagging shall be removed.

34. All excavations shall be checked for tortoises periodically throughout the day and immediately before backfilling. If excavations are not backfilled at the end of the day, they shall be covered and/or fenced to ensure that tortoises cannot enter them.

35. The area underneath parked vehicles and equipment shall be checked for tortoises before moving them.

36. A 15 mph speed limit shall be required for all project vehicles on the project site and unposted access roads.

37. If a desert tortoise occurs in harm's way within the action area for the project and cannot be avoided, the tortoise shall be moved 150 to 1,000 feet from the point of capture in accordance with Service-approved guidelines which is currently Service (2009).

38. All project-related trash and food items shall be disposed properly in predator-proof containers with resealing lids. Trash, stakes, flagging materials, temporary facilities, litter, and all other project-related materials shall be removed from site upon completion of project activities.

39. Any fuel or hazardous waste leaks/spills shall be contained immediately and cleaned up at the time of occurrence. Contaminated soil will be removed and disposed of at an appropriate facility.

40. The project site will be clearly marked or flagged at the outer boundaries prior to initiation of ground disturbance. Project activities shall be limited to the marked or flagged areas and whenever possible, activities shall occur within previously disturbed areas. All project activities shall be limited to the 208.6 acres and project access roads identified in Exhibit B.

Decommissioning/Air Standards

41. The holder shall conduct all activities associated with construction, operation, maintenance and decommission of this right-of-way lease/grant within its authorized limits.

42. The holder shall construct, operate, and maintain the facilities, improvements, and structures within this right-of-way in strict conformity with the plan of development that accompanied the Application and was approved and made part of this grant. Any relocation, additional construction, or use that is not in accord with the approved plan of development, shall not be initiated without the prior written approval of the Authorized Officer. A copy of the complete right-of-way grant, including all stipulations and approved plan of development, shall be made available on the right-of-way during construction, operation, and termination to the Authorized Officer. Noncompliance with the above will be grounds for immediate temporary suspension of activities if it constitutes a threat to public health and safety or the environment.

43. The holder shall comply with all applicable Federal, State, and local laws and regulations, existing or thereafter enacted or promulgated.

44. The holder shall recontour disturbed areas, or designated sections of the right-of-way, by grading to restore the site to approximately the original contour of the ground as determined by the Authorized Officer.

45. The holder shall evenly spread the excess soil excavated from pole holes within the right-of-way and in the immediate vicinity of the pole structure.

46. The holder shall prevent any activities which may cause erosion. Where erosion has resulted, the holder shall re-vegetate and re-habilitate the location. The holder is responsible for consultation with the Authorized Officer for an acceptable proposal.

47. Ninety days prior to termination of the right-of-way, the holder shall contact the Authorized Officer to arrange a joint inspection of the right-of-way. This inspection will be held to agree to an acceptable termination (and rehabilitation) plan. This plan shall include, but is not limited to, removal of facilities, drainage structures, or surface material, recontouring, topsoiling, or seeding. The Authorized Officer must approve the plan in writing prior to the holder's commencement of any termination activities.

DECISION RECORD
for
VALLEY ELECTRIC 24.9 kV DISTRIBUTION LINE PROJECST
Beatty to Tolicha Peak
BLM EA Number: DOI-BLM-NV-B020-2010-0101-EA
BLM Serial Number: N-88360 and N-88358

INTRODUCTION

Valley Electric Association, Inc. has proposed to construct a new 24.9 kV double-circuit distribution line from the VEA Beatty Substation to Tolicha Peak Air Force facilities located on the western side of the Nevada Test and Training Range (NTTR) on public lands administered by the Tonopah Field Office in southwestern Nye County, Nevada.

In addition, an Optical Ground Wire (OPGW)/fiber optic line would be located on the proposed power line. The fiber optic line would provide improved long distance distribution of communications data between the headquarters of Nellis Air Force Base (located outside of Las Vegas, Nevada) and the NTTR. Once the power line/fiber optic ROW moves onto Air Force property, Air Force regulations for permitting the power line ROW apply and would be used to complete that portion of the ROW. The installation of the OPGW would not require an additional new right-of-way as this line would be installed on the proposed distribution structures. The OPGW would be installed for the sole use of the U. S. Air Force (USAF).

DECISION

The Bureau of Land Management (BLM) Tonopah Field Office has determined that the construction of the 24.9 kV distribution line and decommissioning of portions of the existing right-of-way, Nev 062289 on public lands, would not result in significant impacts to the environment and an Environmental Impact Statement (EIS) is not required based on the attached Environmental Assessment (EA) DOI-BLM-NV-B020-2010-0101 and Finding of No Significant Impact (FONSI).

CONFORMANCE

I have determined that the proposed action is in conformance with the approved land use plan and is consistent with the applicable plans and policies of county, state, tribal and Federal agencies. The proposed project is in compliance with the Federal Land Policy and Management Act (FLPMA) of 1976 and all BLM land uses in the Tonopah Resource Management Plan (RMP), the Endangered Species Act and the National Historic Preservation Act. It is my decision to implement the proposed action with the mitigation measures identified below by use of the attached stipulations.

The Proposed Action is consistent with the goals of the *Nye County Policy Plan for Public Lands* and Title 43 CFR 2800 allows for issuing, amending or renewing right-of-way grants for necessary transportation or other systems or facilities which are in the public interest and which require rights-of-way over, upon, under or through public lands, including but not limited to:

(1) Systems for generating, transmitting, and distributing electricity; and
(2) Systems for transmitting or receiving electronic signals and other means of communication; and
(3) 43 CFR 2800.0-3 is the authority for issuing regulations providing for the use, occupancy, and development of the public lands through permits, easements, and rights-of-way.

SELECTED ALTERNATIVE

An EA was prepared in compliance with the National Environmental Policy Act (NEPA) to identify and evaluate alternative locations that would satisfy the project's purpose and need. The selected alternative is the Proposed Action. This alternative would minimize impacts to the Amargosa Toad, a BLM sensitive-listed species and the Desert tortoise (*Gopherus agassizii*), a Federally-listed threatened species and cultural resource avoidance. VEA will comply with all stipulations and term and conditions that are set forth in Exhibit A (Stipulations) attached hereto and made a part thereof. Also attached, is a copy of the EA DOI-BLM-NV-B020-2010-0101-EA for the design and construction of 24.9 kV distribution line near Beatty, Nye County, Nevada.

MITIGATION MEASURES

Mitigation measures would be carried out to protect the desert tortoise. Best management practices would be used in the construction of the power line. Specific project stipulations address the following:

- Discovery of any cultural and/or paleontological resources.
- Weed control.
- Compliance with applicable local, state, and Federal environmental laws and regulations.
- Right-of-way to be maintained in a sanitary condition.
- Soil reclamation
- Compliance with the Tonopah Field Office Biological Opinion (1-5-01-F-570), dated March 14, 2003

To comply with Section 106 of the National Historic Preservation Act (NHPA), a Class III inventory was conducted of the area of potential effect (APE). Findings are detailed in BLM Cultural Resource report BLM N-2819. The TFO submitted a report findings to the Nevada State Historic Preservation Office (SHPO). No further evaluation is required.

Signage to be posted on access roads to indicate "Not a thru access" and/or a preventative type obstruction to access consisting of rocks and/or boulders at certain areas on public lands or the right-of-way that may inhibit the use of off-road access to gain access to private lands.

CONSULTATION AND COORDINATION

Consultation and coordination was carried out with the Federal, state, and local agencies and interested parties, as follows:

- U.S. Fish and Wildlife Service
- Nevada State Clearing House
- Timbisha Shoshone Tribe (Native American Information sharing)
- Nevada Department of Wildlife
- Town of Beatty, Nevada
- Nye County, Nevada
- Nevada Department of Transportation (NDOT)
- Valley Electric Association
- United States Air Force, 98th Range Wind Plans and Programs, Nellis AFB

RATIONALE

1. The proposed action is consistent with promoting the utilization of public lands in common with respect to engineering and technological compatibility and land use plans (43 CFR 2801.2(c)).

2. The proposed action supports coordination with State and local governments, interested individuals and appropriate quasi-governmental entities (43 CFR 2801.2(d)).

3. The recommendation to authorize right-of-way grants on Federal lands meets the stated objective "Lands and Rights-of-Way" page 18, Tonopah Resource Management Plan, approved October 2, 1997.

4. The proposed action is consistent with the goals of the *Nye County Policy Plan for Public Lands*, dated April 3, 1985.

****

Thomas J. Seley

Thomas J. Seley, Field Manager
Tonopah Field Office

April 26, 2011
Date

APPENDIX B

List of Special Status Species with the Potential to Occur

APPENDIX B

A list of special status species and sensitive plant species that may occur within the proposed action area include the following:

Table 3-2 Special Status Species that may occur in the project area	
Mammals	**Common Name**
Antozous pallidus	Palid bat
Eptesicus fuscus	Big brown bat
Corynorhinus townsendii	Townsend's big-eared bat
Myotis califoricus	California myotis
Myotis ciliolabrum	Small-footed myotis
Myotis evotis	Long-eared myotis
Myotis lucifungus	Little brown myotis
Myotis volans	Long-legged myotis
Ovis canadensi nelsoni	Desert bighorn sheep
Birds	**Common Name**
Aquila chrysaetos	Golden eagle
Athene cunucularia	Burrowing owl
Buteo regalis	Ferruginous hawk
Falco mexicanus	Prairie falcon
Lanius ludovicianus	Loggerhead shrike
Pooecetes gramineus	Vesper sparrow
Sphyrapicus nuchalis	Red-naped sapsucker
Vermivora luciae	Lucy's Warbler
Reptiles	**Common Name**
Gopherus agassizii	Mojave Desert Tortoise
Sauromalus obesus	Gila Monster
Amphibians	**Common Name**
Anaxyrus nelsoni	Amargosa Toad
Plants	**Common Name**
Unclahes Rethuiac	Ruth's Milkweed
Astragalus uncialis	Currant Milkvetch
Penstemon palmeri	Palmer's penstemon